CAT 1

HYDRAULIC FITTINGS

24

QUICK CONNECT

TYPE **A** SOCKETS & PLUGS

TYPE **B** SOCKETS & PLUGS

FLATFACE

WING NUT

COUPLINGS

NPTF

NPSM

JIC 37°

ORB

SAE 45°

SAE CODE 61

SAE CODE 62

ORFS

ADAPTERS

SWIVEL PIPE

37 FLARE

JIC TO O-RING

MALE O-RING BOSS

O-RING BOSS TO SWIVEL

NPTF PIPE ADAPTERS

PLUGS



SEALFAST
THE SIMPLE SOLUTION





INDEX

QUICK CONNECT 2-5

THREAD DIAGRAM 6, 7

HY SERIES

NPTF 8

ORB 9

JIC 10

SAE 45 / ORFS 11

43 SERIES

NPTF / JIC 37 12

JIC 37 / SAF 45 13

CODE 61 14

CODE 62 15

ORFS 16-17

ADAPTERS

SWIVEL PIPE 19

37 FLARE 20-21

JIC to O-RING 22-23

NPTF ADAPTERS & PLUGS 24-25

TECHNICAL DATA 26-29



TERMS OF SALE

TERMS:

1/2% 10 Days, net 30 Days

FREIGHT:

All shipments are made FOB Seal Fast Inc. or Point of Manufacturer. (Applies to shipments from Houston Warehouse Only) Freight prepaid on $1500 Net Couplings and accessories, $2500 PVC Tubing, Braided Tubing, Fire & Mill hose. Freight prepaid on $4000 Net Couplings, Rubber Hose, PVC Hose and Sheet Rubber with the exclusion of all PVC Suction including 6" and 8" PVC Suction ONLY orders. If combined with other items freight is prepaid at $3000 Net, otherwise these items will Not be applied toward prepaid freight. **Effective immediately, regardless of invoice value, all uncoupled cut lengths of hoses are shipped FOB Seal Fast Inc.** Seal Fast Inc. reserves the right to determine the most Economical shipping method on all prepaid shipments. **In addition, Seal Fast Inc. reserves the right to refuse any prepaid shipments exceeding 6% freight cost of the order unless items are added or subtracted to keep said freight cost at or below 6%.** Applies to Continental United States, excluding Alaska and Hawaii. **Any evidence of shortage must be reported to Seal Fast Inc. within 10 days. Any Damage to hose/hoses, etc. customer is responsible for filing a claim with the delivery carrier within 10 days. Seal Fast Inc. will not issue credit.**

ALL UPS prepay and add or collect shipments will endure a **$7.50** shipping and handling fee including All backorders. All drop shipments will endure a $5.00 fee.

WARRANTY:

Products are warranted against defects in workmanship and defects in material. Products having such defects will be replaced or credited as Seal Fast elects. Liability is limited to the invoice value of the defective item. Our responsibility shall not exceed the original purchase price of the defective product. In any event, Seal Fast, Inc. shall not be held responsible for any special or consequential damages.

RETURNED GOODS:

If for any reason you wish to return goods, please contact Seal Fast Inc. for prior authorization number. Goods must be returned within 30 days and must be in new and resaleable condition. Minimum handling charge is 15%.

All discrepancies in shipment / invoice must be reported within 10 days of receipt of goods.

PROMPT PAYMENT:

Orders receive preferred treatment when the account is paid promptly. Orders may be held up if any unpaid invoice exceeds 30 days.

MINIMUM INVOICE:

All invoices are subject to a minimum billing charge of 50.00 net. Returned checks are subject to a $25.00 service charge.

GENERAL:

Orders will be accepted subject to delays caused by accident, strike, fire or other causes beyond the control of the seller including failure of seller's suppliers to deliver. Prices, discounts and other specifications are subject to change without notice. All prices are subject to any applicable taxes imposed. The possessions of this price schedule is not to be construed as an offer to sell at the prices shown. Special price for volume quotes will be accepted in writing only.

PLEASE NOTE:

Extra care is taken in the preparation of this literature but Seal Fast, Inc. is not responsible for any inadvertent typographical errors or omissions.

SEAL FAST, INC.

8609 City Park Loop,
Houston, TX 77013

(713) 675-6324 or 800-231-0734 | FAX (713) 675-0146 or 800-681-1515 | E-mail sales@sealfast.com

DISCLAIMERS

Product Images

- Seal Fast makes every reasonable effort to show accurate product representation, however pictures are for reference only, and do not necessarily reflect the exact product you will receive.
- Seal Fast reserves the right to alter product appearance without notice. Some product features shown in pictures may no longer be available.

Product Specifications

- Seal Fast is continuously working to provide the best quality for the best price.
- We reserve the right to alter product specifications without notice.

Product Usage

- Our Sales Team will do their best to assist in choosing the best product for a particular application. However, it is ultimately the customer's responsibility to determine the correct product for the correct application.
- Seal Fast will not be held liable for the abuse or misuse of our products in a manner in which they are not designed.
- Seal Fast cannot guarantee the integrity of an assembly if other manufacturers parts are used.

Product Availability

- Seal Fast reserves the right to discontinue products at any time without prior notice.

Product Pricing

- Seal Fast is constantly doing our best to maintain pricing levels. However, circumstances change and while many prices go down, others will increase.
- Please contact your sales associate for current pricing.

Custom Made Products

- All custom made product sales are final and Non-Refundable.

QUICK CONNECT

TYPE A - HYDRAULIC SOCKETS

Designed to meet **ISO 7241-A** standard.

Material: Carbon Steel
Seal Material: Buna-N(Nitrile)
Surface treatment: Zinc plating



Interchangeable with:
- Parker 6600
- Snap-Tite 61
- Aeroquip 5600 (FD65)

CARBON STEEL								
Body Size	End Size	Over-all Length	Over-all Diameter	Hex Size	Working Pressure	Working Temperature	Part #	List
1/4"	1/4" Female NPT	47mm / 1.85"	25mm / .98"	19mm	5075 psi	-4°F to +176°F	HQD-04-AFS	
3/8"	3/8" Female NPT	57mm / 2.24"	31mm / 1.22"	22mm	4350 psi	-4°F to +176°F	HQD-06-AFS	
1/2"	1/2" Female NPT	66mm / 2.59"	38mm / 1.49"	27mm	4350 psi	-4°F to +176°F	HQD-08-AFS	
3/4"	3/4" Female NPT	82.5mm / 3.24"	54mm / 2.12"	34mm	3625 psi	-4°F to +176°F	HQD-12-AFS	
1"	1" Female NPT	117mm / 4.60"	70mm / 2.75"	41mm	2900 psi	--4°F to +176°F	HQD-16-AFS	

TYPE B - HYDRAULIC SOCKETS

Designed to meet **ISO 7241-B** standard.

Material: Carbon Steel
Seal Material: Buna-N(Nitrile)
Surface treatment: Zinc plating



Interchangeable with:
- Parker 60
- Snap-Tite 72
- Aeroquip FD45

CARBON STEEL								
Body Size	End Size	Over-all Length	Over-all Diameter	Hex Size	Working Pressure	Working Temperature	Part #	List
1/4"	1/4" Female NPT	47mm / 1.85"	25mm / .98"	19mm	5075 psi	-4°F to +176°F	HQD-04-BFS	
3/8"	3/8" Female NPT	57mm / 2.24"	31mm / 1.22"	22mm	4350 psi	-4°F to +176°F	HQD-06-BFS	
1/2"	1/2" Female NPT	66mm / 2.59"	38mm / 1.49"	27mm	4350 psi	-4°F to +176°F	HQD-08-BFS	
3/4"	3/4" Female NPT	82.5mm / 3.24"	54mm / 2.12"	34mm	3625 psi	-4°F to +176°F	HQD-12-BFS	
1"	1" Female NPT	117mm / 4.60"	70mm / 2.75"	41mm	2900 psi	--4°F to +176°F	HQD-16-BFS	

TYPE A - HYDRAULIC PLUGS

Designed to meet **ISO 7241-A** standard.



Interchangeable with:
- Parker 6600
- Snap-Tite 61
- Aeroquip 5600 (FD65)

CARBON STEEL								
Body Size	End Size	Over-all Length	Over-all Diameter	Hex Size	Working Pressure	Working Temperature	Part #	List
1/4"	1/4" Female NPT	35mm / 1.37"	20mm / .78"	19mm	5075 psi	-4°F to +176°F	HQD-04-AMS	
3/8"	3/8" Female NPT	39mm / 1.53"	26mm / 1.02"	22mm	4350 psi	-4°F to +176°F	HQD-06-AMS	
1/2"	1/2" Female NPT	44mm / 1.73"	32mm / 1.25"	27mm	4350 psi	-4°F to +176°F	HQD-08-AMS	
3/4"	3/4" Female NPT	55mm / 2.16"	37mm / 1.45"	34mm	3625 psi	-4°F to +176°F	HQD-12-AMS	
1"	1" Female NPT	75mm / 2.95"	46mm / 1.81"	41mm	2900 psi	--4°F to +176°F	HQD-16-AMS	

TYPE B - HYDRAULIC PLUGS

Designed to meet **ISO 7241-B** standard.



Interchangeable with:
- Parker 60
- Snap-Tite 72
- Aeroquip FD45

CARBON STEEL								
Body Size	End Size	Over-all Length	Over-all Diameter	Hex Size	Working Pressure	Working Temperature	Part #	List
1/4"	1/4" Female NPT	35mm / 1.37"	20mm / .78"	19mm	5075 psi	-4°F to +176°F	HQD-04-BMS	
3/8"	3/8" Female NPT	39mm / 1.53"	26mm / 1.02"	22mm	4350 psi	-4°F to +176°F	HQD-06-BMS	
1/2"	1/2" Female NPT	44mm / 1.73"	32mm / 1.25"	27mm	4350 psi	-4°F to +176°F	HQD-08-BMS	
3/4"	3/4" Female NPT	55mm / 2.16"	37mm / 1.45"	34mm	3625 psi	-4°F to +176°F	HQD-12-BMS	
1"	1" Female NPT	75mm / 2.95"	46mm / 1.81"	41mm	2900 psi	--4°F to +176°F	HQD-16-BMS	

TYPE A - APPLICATIONS

This series couplings are used in a wide range of hydraulic applications including construction equipment, manufacturing machinery, and in-plant systems. They can be found anywhere the fluid transfer lines need to be connected and disconnected for operation or maintenance of equipment.

Rugged construction makes these couplings a good choice for mobile applications including dump trucks, snow plows, refuse hauling, mining, asphalt paving, truck trailer connections and many more. In-plant machinery applications include hydraulic fluid, chemicals and gas lines for paper mills, steel production, and many varieties of plant maintenance and production equipment.

Seal Fast ISO A Quick Connects/Disconnects are double shut-off couplings used widely where frequent connection and disconnection of fluid lines are needed. They are a general purpose coupling recommended for use with mobile hydraulics, machine tools, plastic molding and test equipment applications.

TYPE B - APPLICATIONS

This series couplings are used in a wide range of hydraulic applications including construction equipment, manufacturing machinery, and in-plant systems. They can be found anywhere the fluid transfer lines need to be connected and disconnected for operation or maintenance of equipment.

Rugged construction makes these couplings a good choice for mobile applications including dump trucks, snow plows, refuse hauling, mining, asphalt paving, truck trailer connections and many more. In-plant machinery applications include hydraulic fluid, chemicals and gas lines for paper mills, steel production, and many varieties of plant maintenance and production equipment.

Seal Fast ISO B Quick Connects/Disconnects are double shut-off couplings used widely where frequent connection and disconnection of fluid lines are needed. They are a general purpose coupling recommended for use with mobile hydraulics, machine tools, plastic molding and test equipment applications.

FLAT FACE - HYDRAULIC SOCKETS

Designed to meet **ISO 16208**

Material: Carbon Steel
Seal Material: Buna-N(Nitrile)
Surface treatment: Zinc plating

SOCKETS



Interchangeable with:
- Parker FEM
- Snap-Tite 74
- Aeroquip FD89
-Stucchi A

CARBON STEEL								
Body Size	End Size	Over-all Length	Over-all Diameter	Hex Size	Working Pressure	Working Temperature	Part #	List
1/4"	1/4" Female NPT	47mm / 1.85”	25mm / .98”	19mm	5075 psi	-4°F to +176°F	FFQD-04-F	
3/8"	3/8" Female NPT	57mm / 2.24”	31mm / 1.22”	22mm	4350 psi	-4°F to +176°F	FFQD-06-F	
1/2"	1/2" Female NPT	66mm / 2.59”	38mm / 1.49”	27mm	4350 psi	-4°F to +176°F	FFQD-08-F	
3/4"	3/4" Female NPT	82.5mm / 3.24”	54mm / 2.12”	34mm	3625 psi	-4°F to +176°F	FFQD-12-F	
1"	1" Female NPT	117mm / 4.60”	70mm / 2.75”	41mm	2900 psi	--4°F to +176°F	FFQD-16-F	

FLAT FACE - HYDRAULIC PLUGS

Designed to meet **ISO 16208**.

PLUGS



Interchangeable with:
- Parker FEM
- Snap-Tite 74
- Aeroquip FD89
-Stucchi A

CARBON STEEL								
Body Size	End Size	Over-all Length	Over-all Diameter	Hex Size	Working Pressure	Working Temperature	Part #	List
1/4"	1/4" Female NPT	35mm / 1.37”	20mm / .78”	19mm	5075 psi	-4°F to +176°F	FFQD-04-M	
3/8"	3/8" Female NPT	39mm / 1.53”	26mm / 1.02”	22mm	4350 psi	-4°F to +176°F	FFQD-06-M	
1/2"	1/2" Female NPT	44mm / 1.73”	32mm / 1.25”	27mm	4350 psi	-4°F to +176°F	FFQD-08-M	
3/4"	3/4" Female NPT	55mm / 2.16”	37mm / 1.45”	34mm	3625 psi	-4°F to +176°F	FFQD-12-M	
1"	1" Female NPT	75mm / 2.95”	46mm / 1.81”	41mm	2900 psi	--4°F to +176°F	FFQD-16-M	

FLAT FACE - APPLICATIONS

Seal Fast Flat Face (Flush Face) Quick Connects/Disconnects are made according to ISO 16028 interchange specifications. They have a no-drip valve design to minimize fluid loss allowing for a safer and cleaner environment. These are also ideal where dirt is frequently exposed to the connection points. The female features a sleeve lock safety device to help reduce the chance of accidental disconnect.



WING NUT - HYDRAULIC SOCKETS

Material: Brass & Carbon Steel
Seal Material: Buna-N(Nitrile)
Surface treatment: Zinc plating

SOCKETS



Interchangeable with:
- Parker 6100
- Snap-Tite 78
- Aeroquip 5100
- Dixon W

CARBON STEEL								
Body Size	End Size	Over-all Length	Wrench Flat Size	Wing Nut	Working Pressure	Working Temperature	Part #	List
3/4"	3/4" Female NPT	3.40”	1.14”	3.78”	2900 psi	-4°F to +176°F	WNQD-12-F	
1”	1" Female NPT	3.87”	1.43”	4.38”	2900 psi	-4°F to +176°F	WNQD-16-F	
1-1/4”	1-1/4" Female NPT	4.16”	1.78”	5.20”	2900 psi	-4°F to +176°F	WNQD-20-F	
1-1/2”	1-1/2" Female NPT	4.30”	2.0”	5.33”	2900 psi	-4°F to +176°F	WNQD-24-F	

WING NUT - HYDRAULIC PLUGS

PLUGS



Interchangeable with:
- Parker 6100
- Snap-Tite 78
- Aeroquip 5100
- Dixon W

CARBON STEEL								
Body Size	End Size	Over-all Length	Wrench Flat Size	Hex Size	Working Pressure	Working Temperature	Part #	List
3/4"	3/4” Male NPT	3.13”	1.19”	1.66”	2900 psi	-4°F to +176°F	WNQD-12-M	
1”	1” Male NPT	3.55”	1.56”	1.88”	2900 psi	-4°F to +176°F	WNQD-16-M	
1-1/4”	1-1/4” Male NPT	3.71”	1.88”	2.13”	2900 psi	-4°F to +176°F	WNQD-20-M	
1-1/2”	1-1/2" Male NPT	4.10”	2.17”	2.6”	2900 psi	-4°F to +176°F	WNQD-24-M	

WING NUT - APPLICATIONS

Seal Fast Wing Nut Quick Connects/Disconnects are low spill couplings designed to allow connection under pressure. They are recommended for oil well equipment, sand and salt spreaders, live bottom trailers, dump trailers, etc.



THREAD TYPES

Iron Pipe Thread Abbreviations

NPT	National Pipe Tapered Thread	FSM	Fuels Straight Thread Mechanical Joint

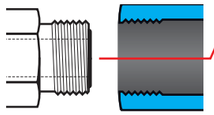

STRAIGHT THREAD – Straight thread run parallel. Port Fittings & Adapter fittings using straight thread require use of an O-ring Boss Seal technique to seal against leakage. (NPSC – American Standard Straight Coupling Pipe Thread are the standards for Straight Thread in the US.)
Seal Method = O-Ring or Bonded Washer

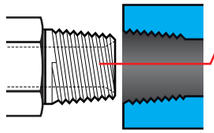

TAPERED THREAD Tapered thread typically uses a 2° angle on the threads allowing the threads to interfere & seal off. Threads must be clean & precise. Pipe Fittings with Tapered Thread don't use O-rings, but rather must use compounds or Teflon Tape to help seal the threads. (National Pipe Thread Taper (NPT) is a U.S. standard for tapered threads used on threaded pipes & fittings.)
Seal Method = Metal-to-Metal

Acronyms Definitions

NPT	National Pipe Thread
FPT	Female Pipe Thread
MPT	Male Pipe Thread
NPTF	National Pipe Taper Fuel (Dryseal)
NPSM	National Pipe Straight Mechanical
JIC 37	Joint Industry Commission 37°
ORB	O Ring Boss
ORFS	O Ring Face Seal
SAE 45	Society of Automotive Engineers 45°

THREADS TYPES













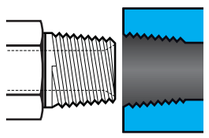

NPTF – National Pipe threads are similar in function to BSP threads, but are not generally interchangeable. NPTF threads are also known as Dryseal. Controlled truncation of threads mean the metal-to-metal thread seal is at root and crest of threads, in addition to flanks of threads.
Seal Method = Metal-to-Metal

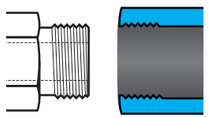

NPSM – National pipe straight thread for mechanical joint. This is used on the female swivel nut of iron pipe swivel adapters. The leak-resistant joint is not made by the sealing fit of threads, but by a tapered seat in the coupling end.
Seal Method = O-Ring or Bonded Washer

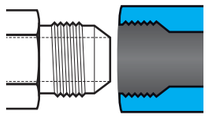

JIC 37 – JIC male has 37° flare which seals against 37° seat in female. JIC male can also seal against 37° flared tubing with JIC nut and sleeve. JIC male can also be used with RYCO S134 J-Lok Female Nut and Flareless Olive on Imperial OD tubing.
Seal Method = O-Ring or Bonded Washer

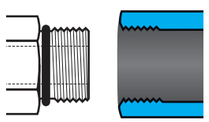

ORB – O Ring Boss seals with O Ring compressed between hex boss of UN male and 12°/15° ta pered bore of UN (O Ring Boss) female port. For elbows and tees, Backup Washer and Lock Nut allow orientation of fitting to required direction.
Seal Method = Metal-to-Metal

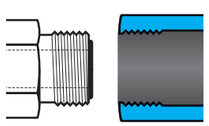

ORFS – ORFS system consists of ORFS Male with O Ring in Face, which seals against Flat Seated ORFS Female Swivel Nut fitting. The Swivel Nut can be slipped back to help installation in tight situations. The prominent position of the O Ring on the Male fitting makes it easy to inspect the condition of the O Ring.
Seal Method = O-Ring or Bonded Washer

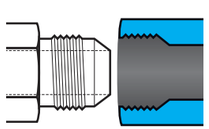

SAE 45 – SAE male has 45° flare which seals against 45° seat in female. Male can also seal against 45° flared tubing with nut and sleeve.
7/16 - 20, 1/2 - 20, 3/4 - 1 6 & 7/8 - 14 are the same thread form as JIC 37° flare. Some fittings in these sizes have both JIC 37° & SAE 45° seats.
Seal Method = Metal-to-Metal

COMPATIBILITY	NPTF	NPSM	JIC 37	ORB	ORFS	SAE 45
MALE NPTF	●	●				
FEMALE NPTF	●	●				
MALE NPSM	●	●				
FEMALE NPSM	●	●				
MALE JIC 37			●			
FEMALE JIC 37			●			
MALE ORB				●		
FEMALE ORB				●		
MALE ORFS					●	
FEMALE ORFS					●	
MALE SAE 45						●
FEMALE SAE 45						●

COUPLINGS

NPTF MALE - RIGID

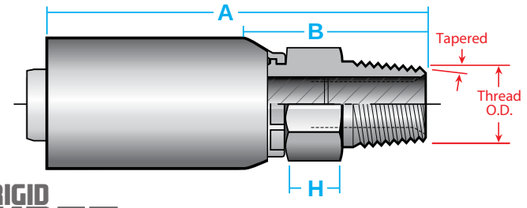

RIGID
NPTF

PLATED STEEL							
NPTF Male		COMPRESSION TYPE					
ID	Thread	A	B	H	Part #	List	
1/4”	1/8” - 27	2.34”	1.00”	5/8”	101HY-2-4		
1/4”	1/4” - 18	2.53”	1.19”	9/16”	101HY-4-4		
3/8”	1/4” - 18	2.55”	1.19”	11/16”	101HY-4-6		
1/4”	3/8” - 18	2.53”	1.19”	3/4”	101HY-6-4		
3/8”	3/8” - 18	2.55”	1.19”	3/4”	101HY-6-6		
1/2”	3/8” - 18	2.72”	1.38”	7/8”	101HY-6-8		
3/8”	1/2” - 14	2.73”	1.38”	7/8”	101HY-8-6		
1/2”	1/2” - 14	2.91”	1.41”	7/8”	101HY-8-8		
5/8”	1/2” - 14	2.94”	1.59”	1-1/8”	101HY-8-10		
3/4”	1/2” - 14	3.08”	1.50”	1-1/4”	101HY-8-12		
3/4”	3/4” - 14	3.08”	1.50”	1-1/4”	101HY-12-12		
1”	3/4” - 14	3.23”	1.63”	1-3/8”	101HY-12-16		
1”	1” - 11-1/2	3.42”	1.81”	1-3/8”	101HY-16-16		

NPTF MALE - SWIVEL

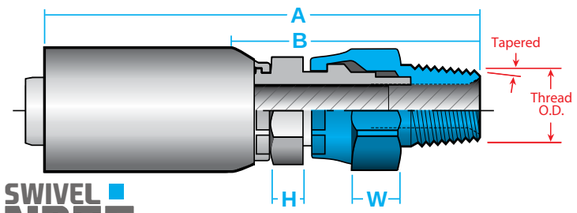

SWIVEL ■
NPTF

PLATED STEEL								
NPTF Male		COMPRESSION TYPE						
ID	Thread	A	B	H	W	Part #	List	
1/4”	1/4” - 18	3.06”	1.72”	9/16”	5/8”	113HY-4-4		
3/8”	1/4” - 18	3.17”	1.81”	11/16”	11/16”	113HY-4-8		
3/8”	3/8” - 18	3.11”	1.75”	11/16”	11/16”	113HY-6-6		
1/2”	3/8” - 18	3.31”	1.97”	7/8”	7/8”	113HY-6-8		
3/8”	1/2” - 14	3.38”	2.03”	7/8”	7/8”	113HY-8-6		
1/2”	1/2” - 14	3.50”	2.16”	7/8”	7/8”	113HY-8-8		
3/4”	3/4” - 14	3.95”	2.38”	1-1/4”	1-1/4”	113HY-12-12		
1”	1” - 11-1/2	4.23”	2.63”	1-1/2”	1-1/2”	113HY-16-16		

ORB MALE - RIGID

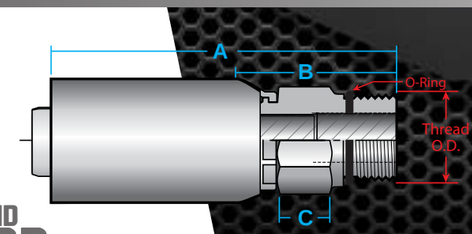

RIGID
ORB

PLATED STEEL						
ORB Male		COMPRESSION TYPE				
ID	Thread	A	B	H	Part #	List
1/4”	7/16” - 20	2.33”	.097”	9/16”	105HY-4-4	
1/4”	9/16” - 18	2.42”	1.06”	11/16”	105HY-6-4	
3/8”	9/16” - 18	2.38”	1.03”	11/16”	105HY-6-6	
3/8”	3/4” - 16	2.42”	1.06”	7/8”	105HY-8-6	
1/2”	3/4” - 16	2.59”	1.25”	7/8”	105HY-8-8	
1/2”	7/8” - 14	2.66”	1.31”	1”	105HY-10-8	

ORB MALE - SWIVEL

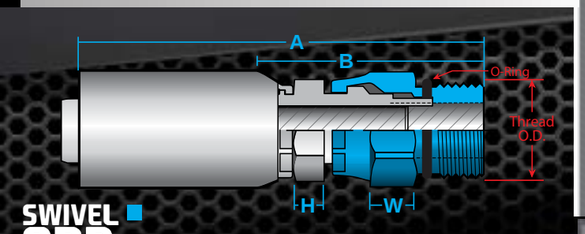

SWIVEL ■
ORB

PLATED STEEL								
ORB Male		COMPRESSION TYPE						
ID	Thread	A	B	H	W	Part #	List	
1/4”	7/16” - 20	3.00”	1.66”	9/16”	5/8”	10GHY-4-4		
3/8”	9/16” - 18	3.14”	1.78”	11/16”	11/16”	10GHY-6-6		
3/8”	3/4” - 16	3.24”	1.88”	13/16”	7/8”	10GHY-8-6		
1/2”	3/4” - 16	3.36”	2.00”	7/8”	7/8”	10GHY-8-8		
1/2”	7/8” - 14	3.44”	2.09”	1”	1”	10GHY-10-8		
1/2”	1-1/6” - 12	3.66”	2.31”	1-1/4”	1-1/4”	10GHY-12-8		

NPTF MALE - 90° SWIVEL

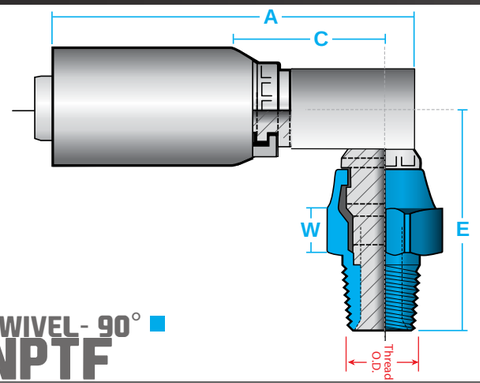

SWIVEL - 90° ■
NPTF

PLATED STEEL								
NPTF Male		COMPRESSION TYPE						
ID	Thread	A	B	E	W	Part #	List	
1/4”	1/4” - 18	2.31”	0.97”	1.69”	11/16”	11LHY-4-4		
3/8”	3/8” - 8	2.33”	0.97”	1.63”	11/16”	11LHY-6-6		
1/2”	1/2” - 14	3.00”	1.09”	1.93”	7/8”	11LHY-8-8		

NPSM FEMALE - SWIVEL 60° CONE

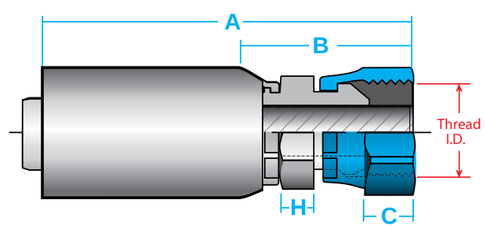

SWIVEL ■
NPSM

PLATED STEEL								
NPSM Male		COMPRESSION TYPE						
ID	Thread	A	B	H	W	Part #	List	
1/4”	1/4” - 18	2.66”	1.31”	9/16”	11/16”	107HY-4-4		
3/8”	3/8” - 18	2.55”	1.19”	3/4”	7/8”	107HY-6-6		
1/2”	1/2” - 14	2.91”	1.56”	1”	1”	107HY-8-8		
3/4”	3/4” - 14	3.22”	1.66”	1-1/4”	1-1/4”	107HY-12-12		

ORB MALE 90° - SWIVEL

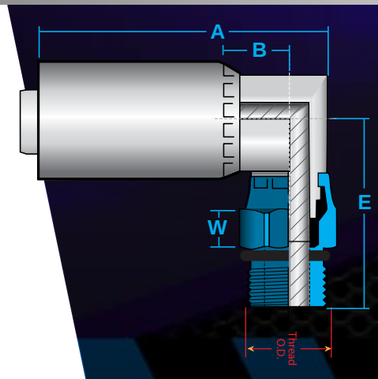

SWIVEL - 90° ■
ORB

PLATED STEEL						
ORB 90° Male		COMPRESSION TYPE				
ID	Thread	A	B	E	W	Part #	List
3/8”	9/16” - 18	2.33”	0.97”	1.66”	11/16”	10LHY-6-6	
3/8”	3/4” - 16	2.33”	0.97”	1.73”	7/8”	10LHY-8-6	
1/2”	3/4” - 16	3.00”	1.09”	1.80”	7/8”	10LHY-8-8	

JIC 37° MALE - RIGID

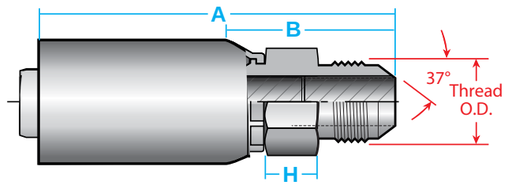

RIGID JIC 37°

PLATED STEEL							
JIC 37° Male		COMPRESSION TYPE					
ID	Thread	A	B	D	Part #	List	
1/4"	7/16" - 20	2.52"	1.19"	5/8"	103HY-4-4		
1/4"	1/2" - 20	2.52"	1.19"	5/8"	103HY-5-4		
1/4"	9/16" - 18	2.53"	1.19"	11/16"	103HY-6-4		
3/8"	9/16" - 18	2.54"	1.19"	11/16"	103HY-6-6		
3/8"	3/4" - 16	2.64"	1.28"	13/16"	103HY-8-6		
1/2"	3/4" - 16	2.81"	1.47"	7/8"	103HY-8-8		
1/2"	7/8" - 14	2.91"	1.56"	1"	103HY-10-8		
5/8"	7/8" - 14	2.98"	1.59"	1-1/8"	103HY-10-10		
3/4"	1 1/16" - 12	3.19"	1.63"	1-1/4"	103HY-12-12		
1"	1 5/16" - 12	3.39"	1.78"	1-3/8"	103HY-16-16		

JIC 37° FEMALE - SWIVEL

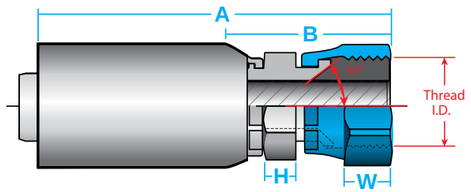

SWIVEL JIC 37°

PLATED STEEL							
JIC 37° Female		COMPRESSION TYPE					
ID	Thread	A	B	H	W	Part #	List
1/4"	7/16" - 20	2.60"	1.25"	9/16"	9/16"	106HY-4-4	
1/4"	1/2" - 20	2.65"	1.31"	9/16"	5/8"	106HY-5-4	
1/4"	9/16" - 18	2.67"	1.31"	9/16"	11/16"	106HY-6-4	
5/16"	9/16" - 18	2.70"	1.34"	5/8"	11/16"	106HY-6-5	
3/8"	9/16" - 18	2.69"	1.34"	11/16"	11/16"	106HY-6-6	
3/8"	3/4" - 16	2.72"	1.38"	7/8"	7/8"	106HY-8-6	
1/2"	3/4" - 16	2.90"	1.41"	7/8"	7/8"	106HY-8-8	
5/8"	3/4" - 16	2.98"	1.59"	1-1/8"	7/8"	106HY-8-10	
1/2"	7/8" - 14	2.98"	1.63"	1"	1"	106HY-10-8	
5/8"	7/8" - 14	3.06"	1.69"	1-1/8"	1"	106HY-10-10	
3/4"	1 1/16" - 12	3.22"	1.66"	1-1/4"	1-1/4"	106HY-12-12	
3/4"	1 5/16" - 12	3.30"	1.72"	1-3/8"	1-1/2"	106HY-16-12	
1"	1 5/16" - 12	3.45"	1.84"	1-3/8"	1-1/2"	106HY-16-16	
1-1/4"	1 5/8" - 12	4.09"	2.25"	2"	2"	106HY-20-20	

JIC 37° FEMALE - 45° SWIVEL

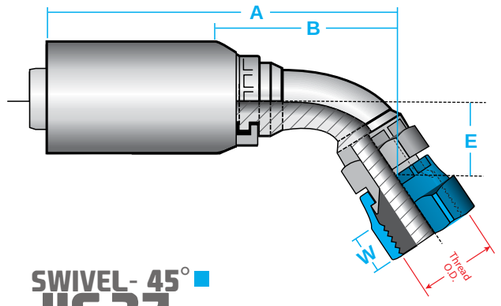

SWIVEL - 45° JIC 37

PLATED STEEL							
JIC 37° Female		COMPRESSION TYPE					
ID	Thread	A	B	E	W	Part #	List
1/4"	7/16" - 20	2.59"	1.32"	0.39"	9/16"	137HY-4-4	
1/4"	9/16" - 18	2.70"	1.43"	0.43"	3/4"	137HY-6-4	
3/8"	9/16" - 18	2.72"	1.44"	0.43"	11/16"	137HY-6-6	
3/8"	3/4" - 16	2.88"	1.60"	0.58"	7/8"	137HY-8-6	
1/2"	3/4" - 16	3.10"	1.81"	0.59"	7/8"	137HY-8-8	
1/2"	7/8" - 14	3.20"	1.91"	0.63"	1"	137HY-10-8	
5/8"	7/8" - 14	3.29"	1.93"	0.63"	1"	137HY-10-10	
3/4"	1 1/16" - 12	3.82"	2.29"	0.83"	1-1/4"	137HY-12-12	
1"	1 5/16" - 12	4.31"	2.69"	0.89"	1-1/2"	137HY-16-16	

JIC 37° FEMALE - 90° SWIVEL

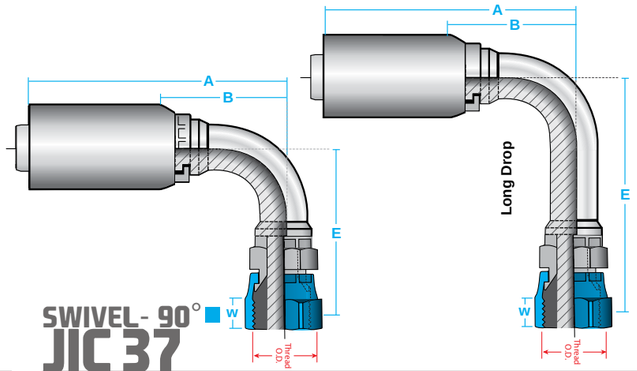

SWIVEL - 90° JIC 37

PLATED STEEL													
JIC 37°Female		COMPRESSION TYPE											
		Short Drop						Long Drop					
ID	Thread	A	B	E	W	Part #	List	A	B	E	Part #	List	
1/4"	7/16" - 20	2.40"	1.13"	0.83"	9/16"	139HY-4-4		2.68"	1.41"	1.81"	141HY-4-4		
1/4"	1/2" - 20	2.50"	1.23"	0.83"	5/8"	139HY-5-4		---	---	---	---		
1/4"	9/16" - 18	2.65"	1.38"	0.91"	3/4"	139HY-6-4		---	---	---	---		
3/8"	9/16" - 18	2.57"	1.29"	0.91"	11/16"	139HY-6-6		2.76"	1.49"	2.13"	141HY-6-6		
3/8"	3/4" - 16	2.64"	1.37"	1.14"	7/8"	139HY-8-6		---	---	---	---		
1/2"	3/4" - 16	2.85"	1.56"	1.14"	7/8"	139HY-8-8		2.89"	1.60"	2.52"	141HY-8-8		
1/2"	7/8" - 14	3.01"	1.72"	1.26"	1"	139HY-10-8		---	---	---	---		
5/8"	7/8" - 14	3.09"	1.73"	1.26"	1"	139HY-10-10							
5/8"	1 1/16" - 12	3.61"	2.25"	1.89"	1-1/4"	139HY-12-10		---	---	---	---		
3/4"	1 1/16" - 12	3.68"	2.15"	1.89"	1-1/4"	139HY-12-12		3.59"	2.03"	3.73"	141HY-12-12		
1"	1 5/16" - 12	4.31"	2.69"	2.31"	1-1/2"	139HY-16-16		4.56"	2.94"	4.33"	141HY-16-16		

SAE 45° FEMALE - SWIVEL

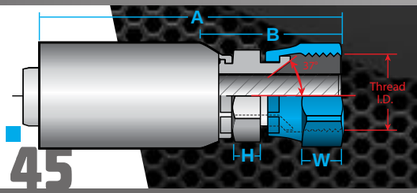

SWIVEL SAE 45

PLATED STEEL							
SAE 45° Female		COMPRESSION TYPE					
ID	Thread	A	B	E	W	Part #	List
3/8"	5/8" - 18	2.75"	1.41"	11/16"	3/4"	108HY-6-6	

ORFS MALE - RIGID

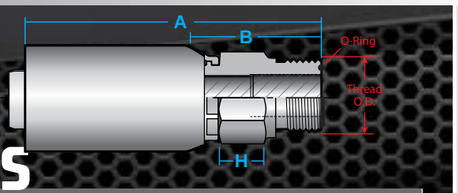

RIGID ORFS

PLATED STEEL						
ORFS Female		COMPRESSION TYPE				
ID	Thread	A	B	H	Part #	List
1/4"	9/16" - 18	2.36"	1.00"	5/8"	1JOHY-4-4	
3/8"	11/16" - 16	2.49"	1.13"	3/4"	1JOHY-6-6	
1/2"	13/16" - 16	2.69"	1.34"	7/8"	1JOHY-8-8	
1/2"	1-3/16" - 12	2.91"	1.56"	1-1/4"	1JOHY-12-8	

ORFS FEMALE - SWIVEL

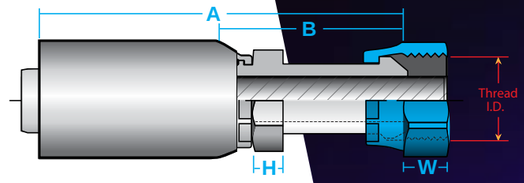

SWIVEL ORFS

PLATED STEEL							
ORFS Female		COMPRESSION TYPE					
ID	Thread	A	B	H	W	Part #	List
1/4"	9/16" - 18	2.59"	1.25"	9/16"	11/16"	1JSHY-4-4	
1/4"	11/16" - 16	2.67"	1.31"	5/8"	13/16"	1JSHY-6-4	
3/8"	11/16" - 16	2.75"	1.34"	11/16"	13/16"	1JSHY-6-6	
3/8"	13/16" - 16	2.84"	1.50"	7/8"	15/16"	1JSHY-8-6	
1/2"	13/16" - 16	2.95"	1.59"	7/8"	15/16"	1JSHY-8-8	
5/8"	1" - 14	3.17"	1.78"	1-1/8"	1-1/8"	1JSHY-10-10	
3/4"	1" - 14	3.27"	1.69"	1-1/4"	1-1/8"	1JSHY-10-12	
3/4"	1 3/16" - 12	3.30"	1.72"	1-1/4"	1-3/8"	1JSHY-12-12	
1"	1 7/16" - 12	3.59"	1.97"	1-3/8"	1-5/8"	1JSHY-16-16	

ORFS FEMALE - 45° SWIVEL

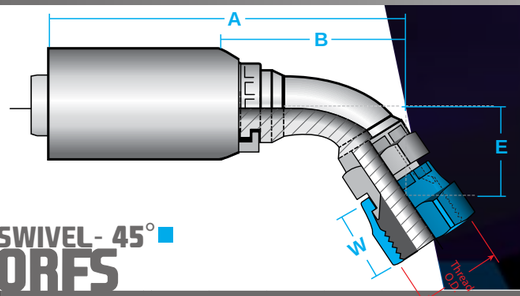

SWIVEL - 45° ORFS

PLATED STEEL							
ORFS 45° Female		COMPRESSION TYPE					
ID	Thread	A	B	E	W	Part #	List
1/4"	9/16" - 18	2.59"	1.32"	0.39"	11/16"	1J7HY-4-4	
3/8"	11/16" - 16	2.72"	1.44"	0.43"	13/16"	1J7HY-6-6	
3/8"	13/16" - 16	2.89"	1.62"	0.59"	15/16"	1J7HY-8-6	
1/2"	13/16" - 16	3.10"	1.81"	0.59"	15/16"	1J7HY-8-8	
1/2"	1" - 14	3.20"	1.91"	0.63"	1-1/8"	1J7HY-10-8	
5/8"	1" - 14	3.29"	1.93"	0.63"	1-1/8"	1J7HY-10-10	
3/4"	1-3/16" - 12	3.82"	2.29"	0.83"	1-3/8"	1J7HY-12-12	
1"	1-7/16" - 12	4.55"	2.94"	0.97"	1-5/8"	1J7HY-16-16	

ORFS FEMALE - 90° SWIVEL

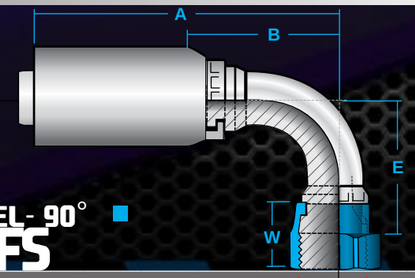

SWIVEL - 90° ORFS

PLATED STEEL							
ORFS 90° Female		COMPRESSION TYPE					
ID	Thread	A	B	E	W	Part #	List
1/4"	9/16" - 18	2.40"	1.13"	0.83"	11/16"	1J9HY-4-4	
3/8"	9/16" - 18	3.08"	1.72"	0.83"	11/16"	1J9HY-4-6	
1/4"	11/16" - 16	2.65"	1.38"	0.91"	13/16"	1J9HY-6-4	
3/8"	11/16" - 16	2.57"	1.29"	0.91"	13/16"	1J9HY-6-6	
3/8"	13/16" - 16	2.64"	1.37"	1.14"	15/16"	1J9HY-8-6	
1/2"	13/16" - 16	2.85"	1.56"	1.14"	15/16"	1J9HY-8-8	
1/2"	1" - 14	3.01"	1.72"	1.26"	1-1/8"	1J9HY-10-8	
5/8"	1" - 14	3.09"	1.73"	1.26"	1-1/8"	1J9HY-10-10	
5/8"	1-3/16" - 12	3.61"	2.25"	1.89"	1-3/8"	1J9HY-12-10	
3/4"	1-3/16" - 12	3.68"	2.15"	1.89"	1-3/8"	1J9HY-12-12	
1"	1-7/16" - 12	4.45"	2.84"	2.25"	1-5/8"	1J9HY-16-16	

NPTF MALE - RIGID

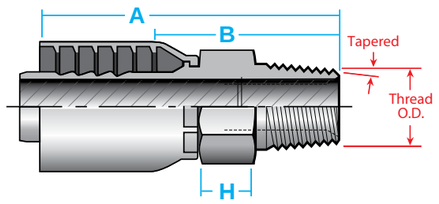

RIGID NPTF

NPTF Male		PLATED STEEL BITE TO WIRE				
ID	Thread	A	B	H	Part #	List
1/4”	1/8” - 27	1.80”	1.05”	9/16”	10143-2-4	
1/4”	1/4” - 18	2.01”	1.26”	9/16”	10143-4-4	
5/16”	1/4” - 18	1.94”	1.19”	11/16”	10143-4-5	
3/8”	3/8” - 18	2.37”	1.34”	3/4”	10143-6-6	
1/2”	3/8” - 18	2.59”	1.33”	7/8”	10143-6-8	
1/2”	1/2” - 14	2.84”	1.58”	7/8”	10143-8-8	
3/4”	3/4” - 14	3.09”	1.65”	1-1/16”	10143-12-12	
1”	1” - 11-1/2	3.59”	1.97”	1-3/8”	10143-16-16	
1-1/4”	1-1/4” - 11-1/2	4.08”	2.39”	1-3/4”	10143-20-20	
1-1/2”	1-1/2” - 11-1/2	3.50”	2.13”	2”	10143-24-24	
2”	2” - 11-1/2	4.05”	2.27”	2-1/2”	10143-32-32	

NPTF MALE - SWIVEL

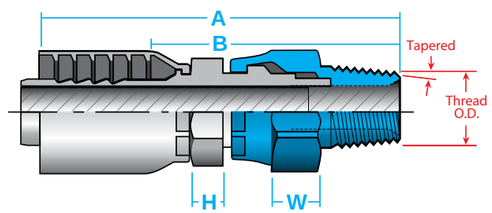

SWIVEL ■ NPTF

NPTF Male		PLATED STEEL BITE TO WIRE				
ID	Thread	A	B	W	Part #	List
1/4”	1/4” - 18	2.68”	1.93”	5/8”	11343-4-4	
3/8”	3/8” - 18	3.08”	2.05”	3/4”	11343-6-6	
1/2”	1/2” - 14	3.52”	2.26”	7/8”	11343-8-8	
3/4”	3/4” - 14	3.93”	2.49”	1-1/4”	11343-12-12	
1”	1-11-1/2”	4.52”	2.90”	1-1/2”	11343-16-16	

JIC 37° FEMALE - 45° SWIVEL

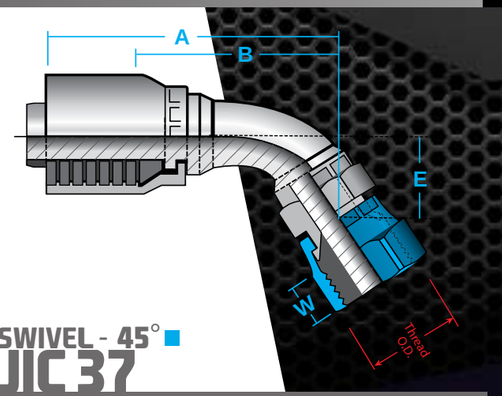

SWIVEL - 45° ■ JIC37

JIC 37° Female		PLATED STEEL BITE TO WIRE					
ID	Thread	A	B	E	W	Part #	List
1/4”	7/16” - 20	1.96”	1.21”	0.39”	9/16”	13743-4-4	
1/4”	1/2” - 20	2.19”	1.26”	0.39”	5/8”	13743-5-4	
1/4”	9/16” - 18	2.23”	1.48”	0.39”	11/16”	13743-6-4	
3/8”	9/16” - 18	2.76”	1.73”	0.39”	11/16”	13743-6-6	
3/8”	3/4” - 16	2.74”	1.74”	0.55”	7/8”	13743-8-6	
1/2”	3/4” - 16	3.20”	1.94”	0.55”	7/8”	13743-8-8	
1/2”	7/8” - 14	2.93”	1.67”	0.63”	1”	13743-10-8	
5/8”	7/8” - 14	3.17”	1.73”	0.63”	1”	13743-10-10	
5/8”	1-1/16” - 12	3.62”	2.08”	0.83”	1-1/4”	13743-12-10	
3/4”	1-1/16” - 12	3.63”	2.19”	0.78”	1-1/4”	13743-12-12	
1”	1-5/16” - 12	4.34”	2.72”	0.95”	1-1/2”	13743-16-16	
1-1/4”	1-5/16” - 12	4.59”	2.82”	1.19”	2”	13743-20-20	
1-1/2”	1-7/8” - 12	5.50”	4.18”	1.47”	2-1/2”	13743-24-24	

JIC 37° FEMALE - 90° SWIVEL

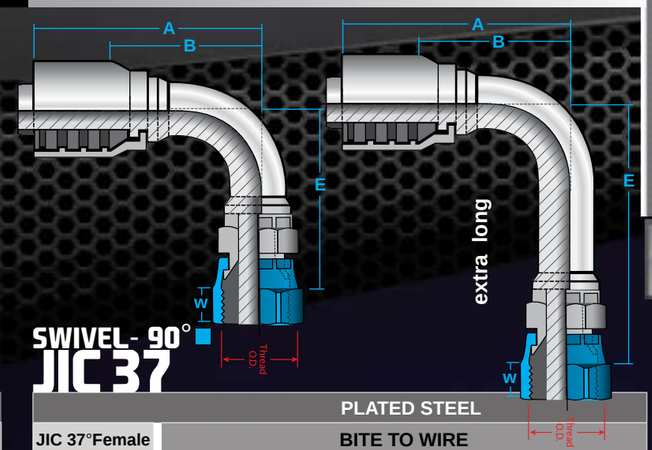

SWIVEL - 90° ■ JIC37

JIC 37°Female		PLATED STEEL BITE TO WIRE											
		Short Drop						Long Drop					
ID	Thread	A	B	E	W	Part #	List	A	B	E	W	Part #	List
1/4”	7/16” - 20	1.78”	1.03”	0.83”	9/16”	13943-4-4		1.96”	1.21”	1.81”	9/16”	14143-4-4	
3/8”	9/16” - 18	2.21”	1.18”	0.91”	11/16”	13943-6-6		2.27”	1.27”	2.18”	11/16”	14143-6-6	
1/2”	9/16” - 18	2.51”	1.25”	0.85”	11/16”	13943-6-8							
1/2”	3/4” - 16	2.62”	1.36”	1.14”	7/8”	13943-8-8		2.62”	1.36”	2.52”	7/8”	14143-8-8	
1/2”	7/8” - 14	2.74”	1.48”	1.26”	1”	13943-10-8		2.78”	1.52”	2.58”	1”	14143-10-8	
5/8”	7/8” - 16	2.97”	1.69”	1.26”	1”	13943-10-10		3.16”	1.75”	2.58”	1”	14143-10-10	
1/2”	7/8” - 14	3.25”	1.99”	1.83”	1-1/4”	13943-12-8							
3/4”	1-1/16” - 12	3.49”	2.05”	1.89”	1-1/4”	13943-12-12		3.49”	2.05”	3.74”	1-1/4”	14143-12-12	
1”	1 -1/16” - 12	4.28”	2.66”	2.20”	1-1/2”	13943-16-16							
1-1/4”	1-5/8” - 12	4.43”	2.74”	2.59”	2”	13943-20-20							
1-1/2”	1-7/8” - 12	5.50”	4.13”	3.81”	2-1/4”	13943-24-24		3.90”	2.31”	4.32”	1-1/2”	141HY-16-16	
2”	2-1/2” - 12	6.75”	4.97”	4.62”	2-7/8”	13943-32-32							

JIC 37° MALE - RIGID

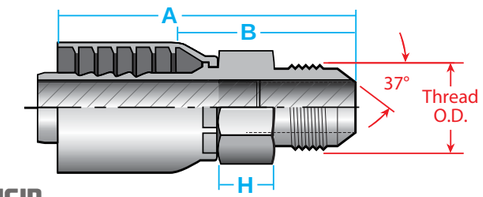

RIGID JIC 37°

JIC 37° Male		PLATED STEEL BITE TO WIRE				
ID	Thread	A	B	H	Part #	List
1/4”	7/16” - 20	1.99”	1.24”	9/16”	10343-4-4	
3/8”	9/16” - 18	2.36”	1.33”	3/4”	10343-6-6	
1/2”	3/4” - 16	2.30”	1.27”	7/8”	10343-8-6	
1/2”	3/4” - 16	2.68”	1.42”	7/8”	10343-8-8	
5/8”	7/8” - 14	3.03”	1.59”	15/16”	10343-10-10	
3/4”	1-1/16” - 12	2.76”	1.50”	1-1/8”	10343-12-8	
3/4”	1-1/16” - 12	3.19”	1.75”	1-1/8”	10343-12-12	
1”	1-5/16” - 12	3.63”	2.01”	1-3/8”	10343-16-16	
1-1/4”	1 5/8” - 12	3.96”	2.27”	1-7/8”	10343-20-20	

JIC 37° FEMALE - SWIVEL

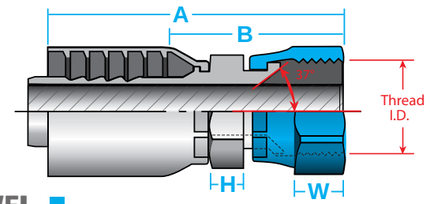

SWIVEL ■ JIC37°

JIC 37° Female		PLATED STEEL BITE TO WIRE					
ID	Thread	A	B	H	W	Part #	List
1/4”	7/16” - 20	1.94”	1.19”	9/16”	9/16”	10643-4-4	
3/8”	9/16” - 18	2.29”	1.26”	11/16”	11/16”	10643-6-6	
1/2”	3/4” - 16	2.77”	1.51”	13/16”	7/8”	10643-8-8	
1/2”	3/4” - 16	2.82”	1.38”	15/16”	7/8”	10643-8-10	
5/8”	7/8” - 14	2.85”	1.59”	7/8”	1”	10643-10-8	
5/8”	7/8” - 14	2.93”	1.49”	15/16”	1”	10643-10-10	
3/4”	1-1/16” - 12	3.17”	1.73”	1-1/16”	1-1/4”	10643-12-12	
1”	1-5/16” - 12	3.88”	2.26”	1-3/8”	1-1/2”	10643-16-16	
1-1/4”	1-5/8” - 12	3.94”	2.25”	1-7/8”	2”	10643-20-20	
1-1/2”	1-7/8” - 12	3.84”	2.47”	2-1/8”	2-1/4”	10643-24-24	
2”	2-1/2” - 12	4.73”	2.95”	2-1/2”	2-7/8”	10643-32-32	

SAE 45° MALE - RIGID

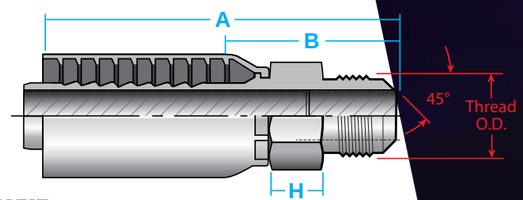

RIGID SAE 45°

ORFS 45° Female		PLATED STEEL BITE TO WIRE				
ID	Thread	A	B	W	Part #	List
3/8”	5/8” - 18	2.21”	1.21”	3/4”	10443-6-6	
3/4”	1-1/16” - 14	3.20”	1.77”	1-1/8”	10443-12-12	

SAE 45° MALE - SWIVEL

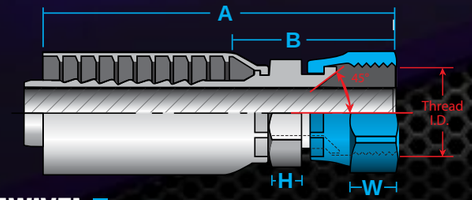

SWIVEL ■ SAE 45°

ORFS 90° Female		PLATED STEEL BITE TO WIRE					
ID	Thread	A	B	E	W	Part #	List
3/8”	5/8” - 18	2.38”	1.35”	3/4”	3/4”	10843-6-6	
3/4”	1-1/16” - 14	3.17”	1.73”	1-1/16”	1-1/4”	110843-12-12	

SAE CODE 61 - FLANGE HEAD

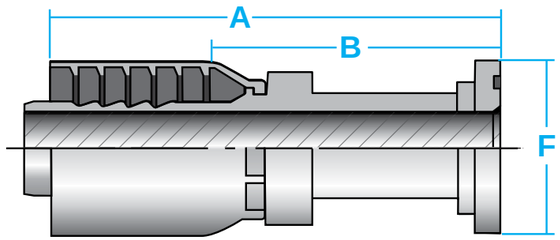

FLAGNE HEAD CODE 61

		PLATED STEEL				
		BITE TO WIRE				
ID	Flange	A	B	F	Part #	List
3/4”	3/4”	3.54”	2.42”	1-1/2”	11543-12-12	
1”	1”	4.25”	2.63”	1-3/4”	11543-16-16	
1-1/4”	1-1/4”	4.70”	3.01”	2”	11543-20-20	
1-1/2”	1-1/2”	4.59”	3.22”	2-3/8”	11543-24-24	
2”	2”	4.99”	3.21”	2-13/16”	11543-32-32	

SAE CODE 62 - FLANGE HEAD

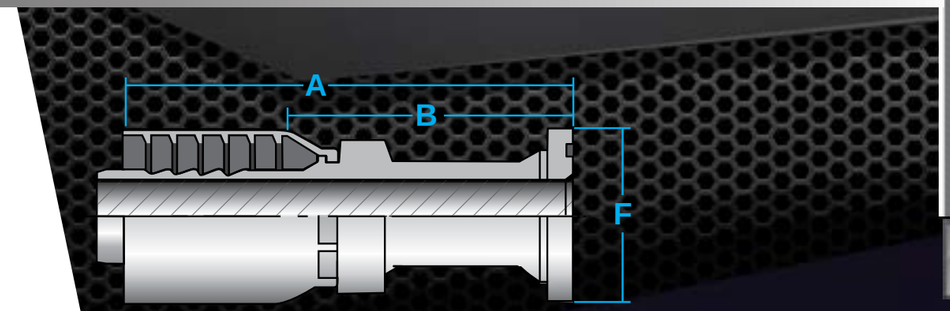

FLAGNE HEAD CODE 62

		PLATED STEEL				
		BITE TO WIRE				
ID	Flange	A	B	F	Part #	List
3/4”	3/4”	4.12”	2.68”	1-5/8”	16A43-12-12	
1”	1”	4.81”	3.19”	1-7/8”	16A43-16-16	
1-1/4”	1-1/4”	5.01”	3.32”	2-1/8”	16A43-20-20	

SAE CODE 61 - FLANGE HEAD 45° ELBOW

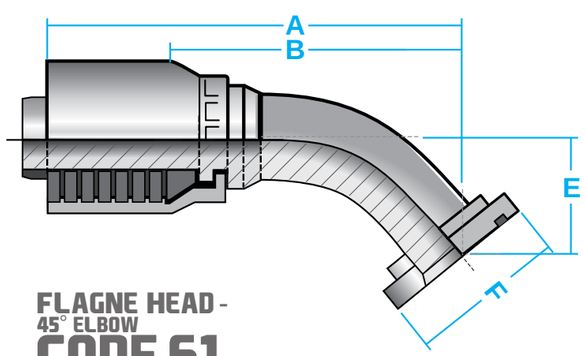

FLAGNE HEAD - 45° ELBOW CODE 61

		PLATED STEEL					
		BITE TO WIRE					
ID	Flange	A	B	E	F	Part #	List
3/4”	3/4”	3.85”	2.41”	1.02”	1-1/2”	11743-12-12	
1”	1”	4.76”	3.14”	1.26”	1-3/4”	11743-16-16	
1-1/4”	1-1/4”	5.61”	3.92”	1.50”	2”	11743-20-20	
1-1/2”	1-1/2”	5.50”	4.13”	1.42”	2-3/8”	11743-24-24	
2”	2”	7.67”	5.89”	2.21”	2-13/16”	11743-32-32	

SAE CODE 61 - FLANGE HEAD 90° ELBOW

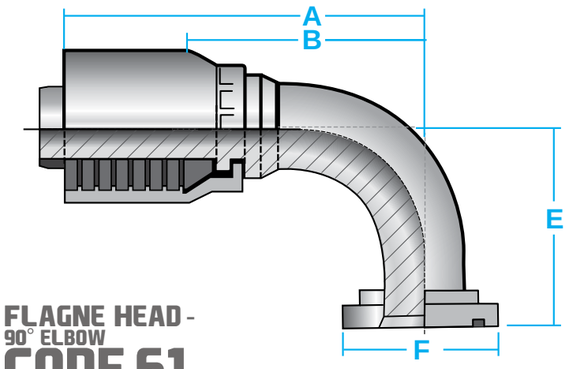

FLAGNE HEAD - 90° ELBOW CODE 61

		PLATED STEEL					
		BITE TO WIRE					
ID	Flange	A	B	E	F	Part #	List
3/4”	3/4”	3.51”	2.07”	2.28”	1-1/2”	11943-12-12	
1”	1”	4.28”	2.66”	2.78”	1-3/4”	11943-16-16	
1-1/4”	1-1/4”	5.12”	3.43”	3.54”	2”	11943-20-20	
1-1/2”	1-1/2”	5.50”	4.13”	4.09”	2-3/8”	11943-24-24	
2”	2”	6.75”	4.97”	5.43”	2-13/16”	11943-32-32	

SAE CODE 62 - FLANGE HEAD 45° ELBOW

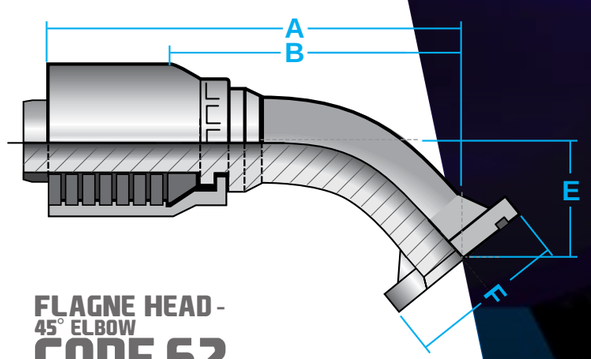

FLAGNE HEAD - 45° ELBOW CODE 62

		PLATED STEEL					
		BITE TO WIRE					
ID	Flange	A	B	E	F	Part #	List
3/4”	3/4”	3.85”	2.38”	1.02”	1-5/8”	16F43-12-12	
1”	1”	4.66”	3.04”	1.26”	1-7/8”	16F43-16-16	

SAE CODE 62 - FLANGE HEAD 90° ELBOW

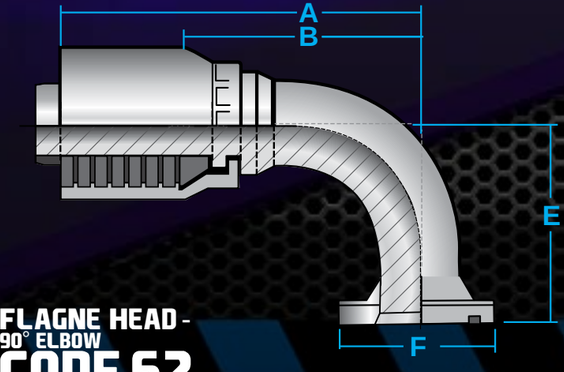

FLAGNE HEAD - 90° ELBOW CODE 62

		PLATED STEEL					
		BITE TO WIRE					
ID	Flange	A	B	E	F	Part #	List
3/4”	3/4”	3.51”	2.07”	2.28”	1-5/8”	16N43-12-12	
1”	1”	4.28”	2.66”	2.76”	1-7/8”	16N43-16-16	
1-1/4”	1-1/4”	5.09”	3.40”	3.54”	2-1/8”	16N43-20-20	

ORFS MALE - RIGID

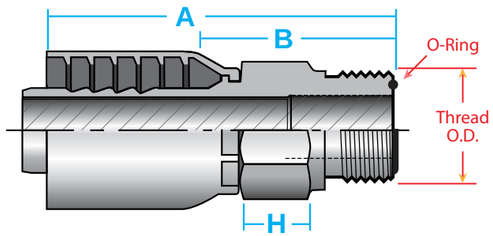

RIGID
ORFS

PLATED STEEL							
ORFS Male		BITE TO WIRE					
ID	Thread	A	B	H	Part #	List
1/4”	9/16” - 18	1.73”	0.98”	5/8”	1J043-4-4	
3/8”	11/16” - 16	2.08”	1.05”	3/4”	1J043-6-6	
3/8”	13/16” - 16	2.20”	1.17”	7/8”	1J043-8-6	
1/2”	13/16” - 16	2.42”	1.17”	7/8”	1J043-8-8	
1/2”	1” - 14	2.61”	1.35”	1-1/16”	1J043-10-8	
5/8”	1” - 14	2.73”	1.34”	1-1/16”	1J043-10-10	
5/8”	1-3/16” - 12	2.89”	1.45”	1-1/4”	1J043-12-10	
3/4”	1-3/16” - 12	2.90”	1.46”	1-1/4”	1J043-12-12	
1”	1-7/16” - 12	3.29”	1.67”	1-1/2”	1J043-16-16	

ORFS FEMALE - SWIVEL - LONG

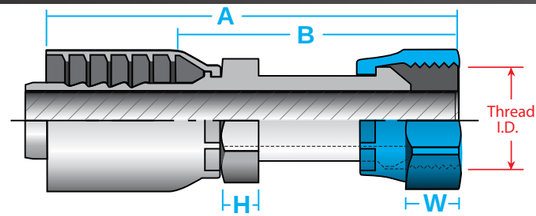

SWIVEL - LONG
ORFS

PLATED STEEL							
ORFS Female		BITE TO WIRE					
ID	Thread	A	B	H	W	Part #	List
1/4”	9/16” - 18	2.07”	1.32”	9/16”	11/16”	1JS43-4-4	
3/8”	9/16” - 18	2.21”	1.18”	11/16”	11/16”	1JS43-4-6	
1/4”	11/16” - 16	2.14”	1.39”	9/16”	13/16”	1JS43-6-4	
3/8”	11/16” - 16	2.28”	1.25”	11/16”	13/16”	1JS43-6-6	
1/2”	11/16” - 16	2.50”	1.24”	13/16”	13/16”	1JS43-6-8	
3/8”	13/16” - 16	2.53”	1.50”	11/16”	15/16”	1JS343-8-6	
1/2”	13/16” - 16	2.65”	1.39”	13/16”	15/16”	1JS43-8-8	
5/8”	13/16” - 16	2.82”	1.38”	15/16”	15/16”	1JS43-8-10	
1/2”	1” - 14	2.89”	1.63”	13/16”	1-1/8”	1JS43-10-8	
5/8”	1” - 14	3.07”	1.66”	15/16”	1-1/8”	1JS43-10-10	
3/4”	1” - 14	3.08”	1.64”	1-1/16”	1-1/8”	1JS43-10-12	
3/4”	1 - 3/16” - 12	3.31”	1.87”	1-1/8”	1-3/8”	1JS43-12-12	
1”	1 - 3/16” - 12	3.53”	1.91”	1-5/16”	1-3/8”	1JS43-12-16	
3/4”	1 - 7/16” - 12	3.37”	1.93”	1-3/8”	1-5/8”	1JS43-16-12	
1”	1 - 7/16” - 12	3.62”	2.00”	1-3/8”	1-5/8”	1JS43-16-16	
1-1/4”	1 - 11/16” - 12	3.77”	2.15”	1-3/4”	1-7/8”	1JS43-20-20	
1-1/2”	2” - 12	3.91”	2.26”	1-7/8”	2-1/4”	1JS43-24-24	

ORFS FEMALE - 45° SWIVEL ELBOW

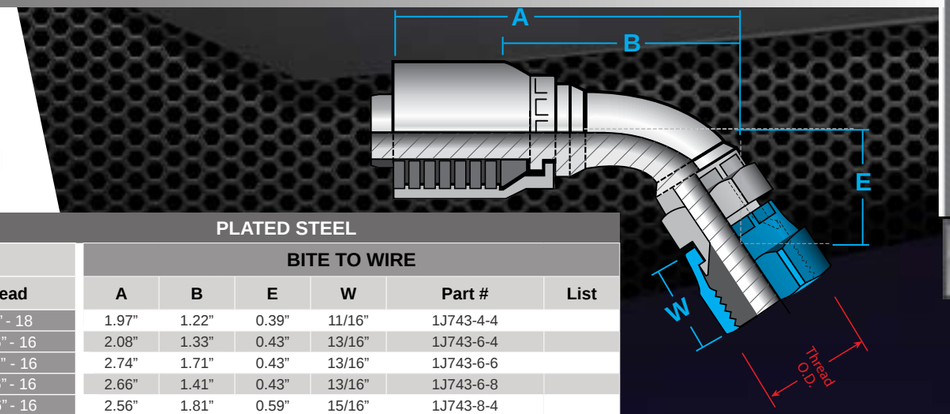

SWIVEL - 45°
ORFS

PLATED STEEL							
ORFS Male		BITE TO WIRE					
ID	Thread	A	B	E	W	Part #	List
1/4”	9/16” - 18	1.97”	1.22”	0.39”	11/16”	1J743-4-4	
1/4”	11/16” - 16	2.08”	1.33”	0.43”	13/16”	1J743-6-4	
3/8”	11/16” - 16	2.74”	1.71”	0.43”	13/16”	1J743-6-6	
1/2”	11/16” - 16	2.66”	1.41”	0.43”	13/16”	1J743-6-8	
1/4”	13/16” - 16	2.56”	1.81”	0.59”	15/16”	1J743-8-4	
3/8”	13/16” - 16	2.53”	1.50”	0.59”	15/16”	1J743-8-6	
3/8”	13/16” - 16	2.53”	1.50”	0.59”	24mm	1J743-8-6-SM	
1/2”	13/16” - 16	3.20”	1.94”	0.59”	15/16”	1J743-8-8	
1/2”	1”- 14	2.93”	1.67”	0.63”	1-1/8”	1J743-10-8	
5/8”	1”- 14	3.17”	1.73”	0.63”	1-1/8”	1J743-10-10	
5/8”	1-3/16”- 12	3.62”	2.18”	0.83”	1-3/8”	1J743-12-10	
3/4”	1-3/16”- 12	3.63”	2.19”	0.83”	1-3/8”	1J743-12-12	
1”	1-7/16”- 12	4.38”	2.76”	0.94”	1-5/8”	1J743-16-16	
1-1/4”	1-7/16”- 12	4.59”	2.94”	0.94”	1-5/8”	1J743-16-20	
1-1/4”	1-11/16”- 12	4.78”	3.09”	1.00”	1-7/8”	1J743-20-20	
1-1/2”	2”- 12	4.70”	3.33”	1.07”	2-1/4 ”	1J743-24-24	

ORFS FEMALE - 90° SWIVEL ELBOW

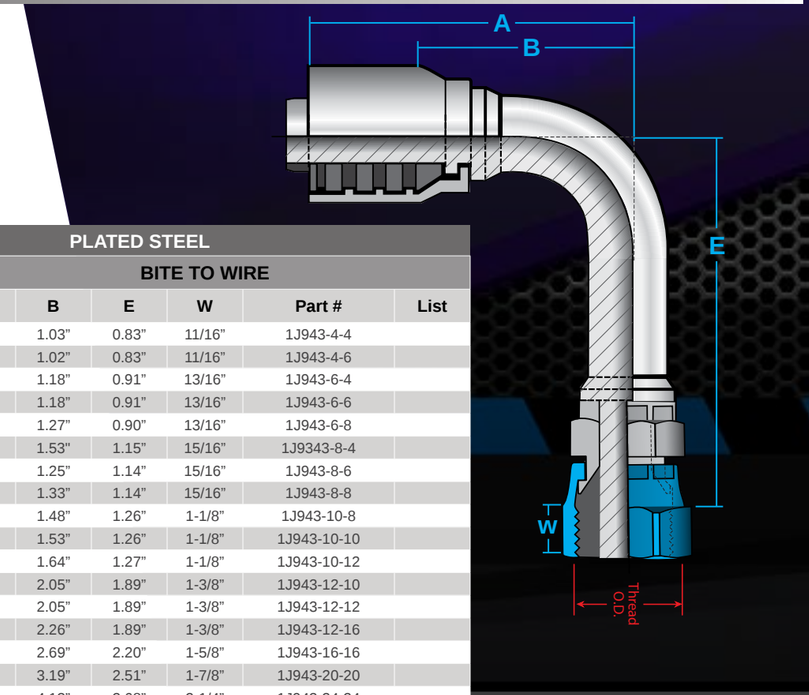

SWIVEL - SHORT - 90°
ORFS

PLATED STEEL							
ORFS Female		BITE TO WIRE					
ID	Thread	A	B	E	W	Part #	List
1/4”	9/16” - 18	1.78”	1.03”	0.83”	11/16”	1J943-4-4	
3/8”	9/16” - 18	2.05”	1.02”	0.83”	11/16”	1J943-4-6	
1/4”	11/16” - 16	1.93”	1.18”	0.91”	13/16”	1J943-6-4	
3/8”	11/16” - 16	2.21”	1.18”	0.91”	13/16”	1J943-6-6	
1/2”	11/16” - 16	2.53”	1.27”	0.90”	13/16”	1J943-6-8	
1/4”	13/16” - 16	2.28”	1.53”	1.15”	15/16”	1J9343-8-4	
3/8”	13/16” - 16	2.28”	1.25”	1.14”	15/16”	1J943-8-6	
1/2”	13/16” - 16	2.59”	1.33”	1.14”	15/16”	1J943-8-8	
1/2”	1” - 14	2.74”	1.48”	1.26”	1-1/8”	1J943-10-8	
5/8”	1” - 14	2.97”	1.53”	1.26”	1-1/8”	1J943-10-10	
3/4”	1” - 14	3.08”	1.64”	1.27”	1-1/8”	1J943-10-12	
5/8”	1 - 3/16” - 12	3.49”	2.05”	1.89”	1-3/8”	1J943-12-10	
3/4”	1 - 3/16” - 12	3.06”	2.05”	1.89”	1-3/8”	1J943-12-12	
1”	1 - 3/16” - 12	3.88”	2.26”	1.89”	1-3/8”	1J943-12-16	
1”	1 - 7/16” - 12	4.31”	2.69”	2.20”	1-5/8”	1J943-16-16	
1-1/4”	1 - 11/16” - 12	4.88”	3.19”	2.51”	1-7/8”	1J943-20-20	
1-1/2”	2” - 12	5.50”	4.13”	2.68”	2-1/4”	1J943-24-24	

SWIVEL PIPE

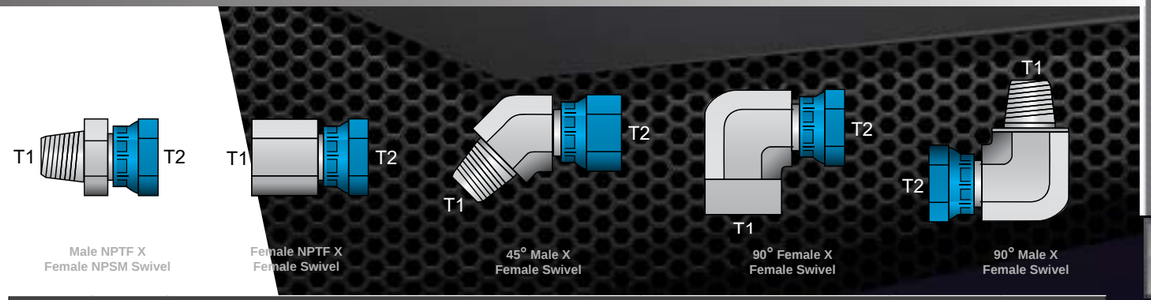

PLATED STEEL

NPTF T1	NPSM T2	Male NPTF X Female NPSM Swivel		Female X Female Swivel		45° Male X Female Swivel		90° Female X Female Swivel		90° Male X Female Swivel	
		Part #	List	Part #	List	Part #	List	Part #	List	Part #	List
1/8”	1/8”	1404-02-02		1405-02-02		1503-02-02		1502-02-02		1501-02-02	
	1/4”	1404-02-04		---		1503-02-04		---		1501-02-04	
1/4”	1/8”	1404-04-02		---		---		1502-04-02		1501-04-02	
	1/4”	1404-04-04		1405-04-04		1503-04-04		1502-04-04		1501-04-04	
	3/8”	1404-04-06		1405-04-06		1503-04-06		1502-04-06		1501-04-06	
3/8”	1/4”	1404-06-04		1405-06-04		1503-06-04		1502-06-04		1501-06-04	
	3/8”	1404-06-06		1405-06-06		1503-06-06		1502-06-06		1501-06-06	
	1/2”	1404-06-08		1405-06-08		1503-06-08		1502-06-08		1501-06-08	
1/2”	1/4”	1404-08-04		---		1503-08-04		---		1501-08-04	
	3/8”	1404-08-06		1405-08-06		1503-08-06		1502-08-06		1501-08-06	
	1/2”	1404-08-08		1405-08-08		1503-08-08		1502-08-08		1501-08-08	
	3/4”	1404-08-12		1405-08-12		1503-08-12		---		1501-08-12	
3/4”	3/8”	---		---		1503-12-06		---		1501-12-06	
	1/2”	1404-12-08		1405-12-08		1503-12-08		1502-12-08		1501-12-08	
	3/4”	1404-12-12		1405-12-12		1503-12-12		1502-12-12		1501-12-12	
	1”	1404-12-16		1405-12-16		1503-12-16		---		1501-12-16	
1”	3/4”	---		1405.16-12		1503-16-12		1502-16-12		1501-16-12	
	1”	1404-16-16		1405-16-16		1503-16-16		1502-16-16		1501-16-16	
	1-1/4”	1404-16-20		---		1503-16-20		---		1501-16-20	
1-1/4”	3/4”	---		---		---		---		1501-20-12	
	1”	1404-20-16		---		1503-20-16		1502-20-16		1501-20-16	
	1-1/4”	1404-20-20		1405-20-20		1503-20-20		1502-20-20		1501-20-20	
	1-1/2”	1404-20-24		---		---		---		1501-20-24	
1-1/2”	1-1/4”	1404-24-20		---		---		---		1501-24-20	
	1-1/2”	1404-24-24		1405-24-24		1503-24-24		1502-24-24		1501-24-24	
2”	2”	1404-32-32		1405-32-32		1503-32-32		1502-32-32		1501-32-32	

37 FLARE TO PIPE ADAPTERS

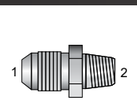

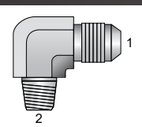

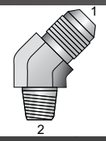

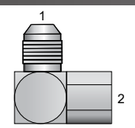

PLATED STEEL

T1 JIC	T2 NPTF	Male JIC X Male NPTF Part #	List	90° JIC Male X Male NPTF Part #	List
5/16”	1/4”	2404-02-04		---	
7/16”	1/8”	2404-04-02		2501-04-02	
	1/4”	2404-04-04		2501-04-04	
	3/8”	2404-04-06		2501-04-06	
	1/2”	2404-04-08		2501-04-08	
1/2”	1/8”	---		2501-05-02	
	1/4”	---		2501-05-04	
	3/8”	---		2501-05-06	
9/16”	1/8”	2404-06-02		2501-06-02	
	1/4”	2404-06-04		2501-06-04	
	3/8”	2404-06-06		2501-06-06	
	1/2”	2404-06-08		2501-06-08	
	3/4”	2404-06-12		2501-06-12	
3/4”	1/4”	2404-08-04		2501-08-04	
	3/8”	2404-08-06		2501-08-06	
	1/2”	2404-08-08		2501-08-08	
	3/4”	2404-08-12		2501-08-12	
	1”	2404-08-16		---	
7/8”	3/8”	2404-10-06		2501-10-06	
	1/2”	2404-10-08		2501-10-08	
	3/4”	2404-10-12		2501-10-12	
1-1/16”	3/8”	2404-12-06		---	
	1/2”	2404-12-08		2501-12-08	
	3/4”	2404-12-12		2501-12-12	
	1”	2404-12-16		2501-12-16	
	1-1/4”	2404-12-20		---	
1-3/16”	3/4”	---		2501-14-12	
1-5/16”	3/4”	2404-16-12		2501-16-12	
	1”	2404-16-16		2501-16-16	
	1-1/4”	2404-16-20		---	
	1-1/2”	2404-16-24		---	
1-5/8”	3/4”	2404-20-12		---	
	1”	2404-20-16		2501-20-16	
	1-1/4”	2404-20-20		2501-20-20	
	1-1/2”	2404-20-24		2501-20-24	
1-7/8”	1”	2404-24-16		---	
	1-1/4”	2404-24-20		2501-24-20	
	1-1/2”	2404-24-24		2501-24-24	
	2”	2404-24-32			
2-1/2”	1”	2404-32-16		---	
	1-1/4”	2404-32-20		---	
	1-1/2”	2404-32-24		---	
	2”	2404-32-32		2501-32-32	

T1 JIC	T2 NPTF	45° JIC Male X Male NPTF Part #	List	90° JIC Male x Female NPTF Part #	List
5/16”	1/4”	---		---	
7/16”	1/8”	2503-04-02		2502-04-02	
	1/4”	2503-04-04		2502-04-04	
	3/8”	---		---	
	1/2”	---		---	
1/2”	1/8”	2503-05-02		2502-05-02	
	1/4”	2503-05-04		2502-05-04	
	3/8”	---		---	
9/16”	1/8”	2503-06-02		2502-06-02	
	1/4”	2503-06-04		2502-06-04	
	3/8”	2503-06-06		2502-06-06	
	1/2”	2503-06-08		2502-06-08	
	3/4”	---		---	
3/4”	1/4”	2503-08-04		2502-08-04	
	3/8”	2503-08-06		2502-08-06	
	1/2”	2503-08-08		2502-08-08	
	3/4”	2503-08-12		2502-08-12	
	1”	---		---	
7/8”	3/8”	2503-10-06		---	
	1/2”	2503-10-08		2502-10-08	
	3/4”	2503-10-12		2502-10-12	
1-1/16”	3/8”	---		---	
	1/2”	2503-12-08		2502-12-08	
	3/4”	2503-12-12		2502-12-12	
	1”	2503-12-16		---	
	1-1/4”	---		---	
1-3/16”	3/4”	2503-14-12		---	
1-5/16”	3/4”	2503-16-12		2502-16-12	
	1”	2503-16-16		2502-16-16	
	1-1/4”	2503-16-20		---	
	1-1/2”	---			
1-5/8”	3/4”	---		---	
	1”	---		---	
	1-1/4”	2503-20-20		2502-20-20	
	1-1/2”	---		---	
1-7/8”	1”	---		---	
	1-1/4”	---		---	
	1-1/2”	2503-24-24		2502-24-24	
	2”	---		---	
2-1/2”	1”	---		---	
	1-1/4”	---		---	
	1-1/2”	---		---	
	2”	2503-32-32		2502-32-32	

37 FLARE TO PIPE ADAPTERS



PLATED STEEL

T1 JIC	T2 NPTF	Female JIC Swivel X Male Part #	List	Female JIC Swivel X Female NPTF Part #	List
7/16”	1/8”	---		---	
	1/4”	6505-04-04		6506-04-04	
1/2”	1/8”	---		---	
	1/4”	---		---	
9/16”	1/4”	6505-06-04		---	
	3/8”	6505-06-06		6506-06-06	
	1/2”	---		6506-06-08	
3/4”	1/4”	---		---	
	3/8”	---		6506-08-06	
	1/2”	6505-08-08		6506-08-08	
7/8”	3/8”	---		---	
	1/2”	6505-10-08		6506-10-08	
	3/4”	6505-10-12		---	
1-1/16”	1/2”	---		---	
	3/4”	6505-12-12		6506-12-12	
1-3/16”	3/4”	---		---	
1-5/16”	3/4”	6505-16-12		---	
	1”	6505-16-16		6506-16-16	
1-5/8”	1”	---		---	
	1-1/4”	6505-20-20		6506-20-20	
1-7/8”	1-1/2”	6505-24-24		6506-24-24	
2-1/2”	2”	---		---	

T1 JIC	T2 NPTF	JIC Male X Female Part #	List	Female JIC x Male NPTF Part #	List
7/16”	1/8”	2405-04-02		6501-04-02	
	1/4”	2405-04-04		6501-04-04	
1/2”	1/8”	2405-05-02		---	
	1/4”	2405-05-04		---	
9/16”	1/4”	2405-06-04		6501-06-04	
	3/8”	2405-06-06		6501-06-06	
	1/2”	2405-06-08		6501-06-08	
3/4”	1/4”	2405-08-04		---	
	3/8”	2405-08-06		6501-08-06	
	1/2”	2405-08-08		6501-08-08	
7/8”	3/8”	2405-10-06		---	
	1/2”	2405-10-08		6501-10-08	
	3/4”	---		---	
1-1/16”	1/2”	2405-12-08		---	
	3/4”	2405-12-12		6501-12-12	
1-3/16”	3/4”	2405-14-12		6501-14-12	
1-5/16”	3/4”	2405-16-12		---	
	1”	2405-16-16		6501-16-16	
1-5/8”	1”	2405-20-16		---	
	1-1/4”	2405-20-20		6501-20-20	
1-7/8”	1-1/2”	2405-24-24		6501-24-24	
2-1/2”	2”	2405-32-32		6501-32-32	

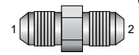





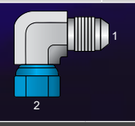

PLATED STEEL

T1 JIC	T2 JIC	JIC Male X JIC Male Part #	List	90° JIC Male X 90° JIC Male Part #	List	45° JIC Male X JIC Swivel Female Part #	List
7/16”	7/16”	2403-04-04		2500-04-04		6502-04-04	
1/2”	1/2”	2403-05-05		2500-05-05		6502-05-05	
9/16”	7/16”	2403-06-04		2500-06-04		---	
	1/2”	2403-06-05		---			
	9/16”	2403-06-06		2500-06-06		6502-06-06	
	3/4”	---		---		---	
3/4”	7/16”	2403-08-04		---		---	
	9/16”	2403-08-06		2500-08-06		---	
	3/4”	2403-08-08		2500-08-08		6502-08-08	
	7/8”	---		---		---	
7/8”	9/16”	2403-10-06		---		---	
	3/4”	2403-10-08		2500-10-08		---	
	7/8”	2403-10-10		2500-10-10		6502-10-10	
1-1/16”	3/4”	2403-12-08		2500-12-08		---	
	7/8”	---		---		---	
	1-1/16”	2403-12-12		2500-12-12		6502-12-12	
1-3/16”	1-3/16”	2403-14-14		2500-14-14		6502-14-14	
1-5/16”	1-1/16”	2403-16-12		2500-16-12		---	
	1-5/16”	2403-16-16		2500-16-16		6502-16-16	
1-5/8”	1-5/16”	2403-20-16		---		---	
	1-5/8”	2403-20-20		2500-20-20		6502-20-20	
1-7/8”	1-7/8”	2403-24-24		2500-24-24		6502-24-24	
2-1/2”	2-1/2”	2403-32-32		2500-32-32		6502-32-32	

PLATED STEEL

90° JIC Male x JIC Swivel Female Part #	List
6500-04-04	
6500-05-05	
6500-06-04	
6500-06-06	
6500-06-08	

6500-08-06	
6500-08-08	
6500-08-10	

6500-10-08	
6500-10-10	

6500-12-10	
6500-12-12	
6500-14-14	

6500-16-16	

6500-20-20	
6500-24-24	
6500-32-32	

JIC TO O-RING ADAPTERS



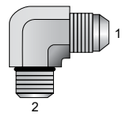

PLATED STEEL					
JIC T1	ORB T2	JIC Male X Male ORB		90° JIC Male X Male O-Ring	
		Part #	List	Part #	List
5/16”	5/16”	6400-02-02		---	---
3/8”	3/8”	6400-03-03		---	---
7/16”	7/16”	6400-04-04		6801-04-04	
	1/2”	6400-04-05		6801-04-05	
	9/16”	6400-04-06		6801-04-06	
	3/4”	6400-04-08		6801-04-08	
1/2”	7/16”	6400-05-04		6801-05-04	
	1/2”	6400-05-05		6801-05-05	
	9/16”	6400-05-06		6801-05-06	
9/16”	7/16”	6400-06-04		6801-06-04	
	1/2”	6400-06-05		6801-06-05	
	9/16”	6400-06-06		6801-06-06	
	3/4”	6400-06-08		6801-06-08	
	7/8”	6400-06-10		6801-06-10	
	1-1/16”	6400-06-12		6801-06-12	
3/4”	7/16”	6400-08-04		6801-08-04	
	9/16”	6400-08-06		6801-08-06	
	3/4”	6400-08-08		6801-08-08	
	7/8”	6400-08-10		6801-08-10	
	1-1/16”	6400-08-12		6801-08-12	
	1-5/16”	6400-08-16		---	
7/8”	9/16”	6400-10-06		6801-10-06	
	3/4”	6400-10-08		6801-10-08	
	7/8”	6400-10-10		6801-10-10	
	1-1/16”	6400-10-12		6801-10-12	
	1-3/16”	6400-10-14		---	
1-1/16”	9/16”	---		6801-12-06	
	3/4”	6400-12-08		6801-12-08	
	7/8”	6400-12-10		6801-12-10	
	1-1/16”	6400-12-12		6801-12-12	
	1-3/16”	---		6801-12-14	
	1-5/16”	6400-12-16		6801-12-16	
	1-5/8”	6400-12-20		---	
1-3/16”	1-5/8”	---		6801-14-12	
	1-3/16”	6400-14-14		6801-14-14	
	1-5/16”	6400-14-16		---	
1-5/16”	7/8”	6400-16-10		6801-16-10	
	1-1/16”	---		6801-16-12	
	1-3/16”	6400-16-14		6801-16-14	
	1-5/16”	6400-16-16		6801-16-16	
	1-5/8”	6400-16-20		6801-16-20	
	1-7/8”	6400-16-24		---	
1-5/8”	1-1/16”	6400-20-12		---	
	1-5/16”	6400-20-16		6801-20-16	
	1-5/8”	6400-20-20		6801-20-20	
	1-7/8”	6400-20-24		6801-20-24	
1-7/8”	1-5/16”	6400-24-16		6801-24-16	
	1-5/8”	6400-24-20		6801-24-20	
	1-7/8”	6400-24-24		6801-24-24	
	2-1/2”	6400-24-32		6801-24-32	
2-1/2”	1-7/8”	6400-32-24		6801-32-24	
	2-1/2”	6400-32-32		6801-32-32	

MALE O-RING BOSS



PLATED STEEL			
ORB T1	NPTF T2	Male O-Ring Boss X Female NPTF	
		Part #	List
7/16”	1/8”	6405-04-02	
	1/4”	6405-04-04	
1/2”	1/8”	6405-05-02	
	1/4”	6405-05-04	
9/16”	1/4”	6405-06-04	
	3/8”	6405-06-06	
	1/2”	6405-06-08	
3/4”	1/4”	6405-08-04	
	3/8”	6405-08-06	
	1/2”	6405-08-08	
7/8”	3/8”	6405-10-06	
	1/2”	6405-10-08	
	3/4”	6405-10-12	
1-1/16”	1/2”	6405-12-08	
	3/4”	6405-12-12	
1-3/16”	3/4”	6405-14-12	
1-5/16”	3/4”	6405-16-12	
	1”	6405-16-16	
	1-1/4”	6405-16-20	
1-5/8”	3/4”	6405-20-12	
	1”	6405-20-16	
	1-1/4”	6405-20-20	
1-7/8”	1”	6405-24-16	
	1-1/4	6405-24-20	
	1-1/2	6405-24-24	
2-1/2”	2”	6405-32-32	

Hose Couplings - Male JIC Tee

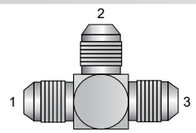

PLATED STEEL		
JIC T1 , T2, T3	JIC Male X JIC Male X JIC Male	
	Part #	List
7/16”	2603-04	
1/2”	2603-05	
9/16”	2603-06	
3/4”	2603-08	
7/8”	2603-10	
1-1/16”	2603-12	
1-3/16”	2603-14	
1-5/16”	2603-16	
1-5/8”	2603-20	
1-7/8”	2603-24	
2-1/2”	2603-32	

ADAPTERS

HYDRAULICS

O-RING BOSS TO SWIVEL ADAPTERS



PLATED STEEL							
ORB T1	NPSM T2	Male O-Ring X Female Swivel NPSM		90° Male O-Ring X Female Swivel NPSM		45° Male O-Ring X Female Swivel NPSM	
		Part #	List	Part #	List	Part #	List
7/16”	1/8”	---		6901-04-02		---	
	1/4”	6900-04-04		6901-04-04		6902-04-04	
	3/8”	6900-04-06		---		---	
1/2”	1/4”	6900-05-04		---		---	
	1/2”	6900-05-08		---		---	
9/16”	1/4”	6900-06-04		6901-06-04		6902-06-04	
	3/8”	6900-06-06		6901-06-06		6902-06-06	
	1/2”	6900-06-08		6901-06-08		---	
3/4”	1/4”	6900-08-04		6901-08-04		---	
	3/8”	6900-08-06		6901-08-06		6902-08-06	
	1/2”	6900-08-08		6901-08-08		6902-08-08	
	3/4”	6900-08-12		6901-08-12		---	
7/8”	3/8”	6900-10-06		6901-10-06		6902-10-06	
	1/2”	6900-10-08		6901-10-08		6902-10-08	
	3/4”	6900-10-12		6901-10-12		6902-10-12	
1-1/16”	3/8”	---		6901-12-06		---	
	1/2”	6900-12-08		6901-12-08		6902-12-08	
	3/4”	6900-12-12		6901-12-12		6902-12-12	
	1”	6900-12-16		6901-12-16		---	
1-3/16”	3/4”	6900-14-12		---		---	
1-5/16”	3/4”	6900-16-12		6901-16-12		6902-16-12	
	1”	6900-16-16		6901-16-16		6902-16-16	
1-5/8”	1”	6900-20-16		6901-20-16		6902-20-16	
	1-1/4”	6900-20-20		6901-20-20		6902-20-20	
1-7/8”	1-1/4”	6900-24-20		---		---	
	1-1/2”	6900-24-24		6901-24-24		6902-24-24	
2-1/2”	2”	6900-32-32		6901-32-32		---	

PLATED STEEL							
ORB T1	JIC T2	Male O-Ring X Female Swivel		90° Male O-Ring X JIC Female Swivel		45° JIC Male X Male O-Ring	
		Part #	List	Part #	List	Part #	List
7/16”	7/16”	6402-04-04		6809-04-04		6802-04-04	
	9/16”	---	---	---	---	6802-04-06	
9/16”	7/16”	6402-06-04		---	---	6802-06-04	
1/2”	1/2”	---	---	---	---	6802-05-05	
9/16”	9/16”	6402-06-06		6809-06-06		6802-06-06	
	3/4”	---	---	---	---	6802-06-08	
3/4”	9/16”	6402-08-06		---	---	6802-08-06	
	3/4”	6402-08-08		6809-08-08		6802-08-08	
	7/8”	---	---	---	---	6802-08-10	
	1-1/16”	6402-08-12		---	---	---	
7/8”	9/16”	6402-10-06		---	---	---	
	3/4”	6402-10-08		---	---	6802-10-08	
	7/8”	---	---	6809-10-10		6802-10-10	
	1-1/16”	6402-10-12		---	---	6802-10-12	
1-1/16”	7/8”	---	---	---	---	6802-12-10	
	3/4”	6402-12-08		---	---	---	
	1-1/16”	6402-12-12		6809-12-12		6802-12-12	
	1-5/16”	---	---	---	---	6802-12-16	
1-3/16”	1-3/16”	---	---	---	---	6802-14-14	
1-5/16”	1-1/16”	---	---	---	---	6802-16-12	
	1-5/16”	6402-16-16		6809-16-16		6802-16-16	
	1-5/8”	---	---	---	---	6802-16-20	
1-5/8”	1-5/8”	6402-20-20		6809-20-20		6802-20-20	
1-7/8”	1-7/8”	---	---	---	---	6802-24-24	
2-1/2”	2-1/2”	---	---	---	---	6802-32-32	



Male O-Ring X Female Swivel



90° Male O-Ring X JIC Female Swivel



45° JIC Male X Male O-Ring

NPTF PIPE ADAPTERS & BUSHINGS

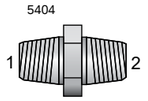

Male NPTF X Male NPTF

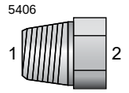

Male NPTF X Female NPTF

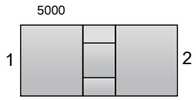

Female X Female

PLATED STEEL							
NPTF T1 NPTF	T2	Male NPTF X Male NPTF		Male NPTF X Female NPTF		Female NPTF X Female NPTF	
		Part #	List	Part #	List	Part #	List
1/8”	1/8”	5404-02-02		---		5000-02-02	
1/4”	1/8”	5404-04-02		5406-04-02		5000-04-02	
	1/4”	5404-04-04		---		5000-04-04	
3/8”	1/8”	5404-06-02		5406-06-02		---	
	1/4”	5404-06-04		5406-06-04		5000-06-04	
	3/8”	5404-06-06		---		5000-06-06	
1/2”	1/4”	5404-08-04		5406-08-04		5000-08-04	
	3/8”	5404-08-06		5406-08-06		5000-08-06	
	1/2”	5404-08-08				5000-08-08	
3/4”	1/4”			5406-12-04		---	
	3/8”	---		5406-12-06		---	
	1/2”	5404-12-08		5406-12-08		5000-12-08	
	3/4”	5404-12-12		---		5000-12-12	
1”	3/8”	---		5406-16-06		---	
	1/2”	---		5406-16-08		---	
	3/4”	5404-16-12		5406-16-12		5000-16-12	
	1”	5404-16-16		---		5000-16-16	
1-1/4”	1/2”	---		5406-20-08		---	
	3/4”	---		5406-20-12		---	
	1”	5404-20-16		5406-20-16		---	
	1-1/4”	5404-20-20		---		5000-20-20	
1-1/2”	1/2”	---		5406-24-08		---	
	3/4”	---		5406-24-12		---	
	1”	---		5406-24-16		---	
	1-1/4”	---		5406-24-20		---	
	1-1/2”	5404-24-24		---		5000-24-24	
2”	1/2”	---		5406-32-08		---	
	3/4”	---		5406-32-12		---	
	1”	---		5406-32-16		---	
	1-1/4”	---		5406-32-20		---	
	1-1/2”	---		5406-32-24		---	
	2”	5404-32-32		---		5000-32-32	

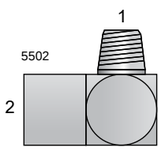

90 Female NPTF X Male NPTF

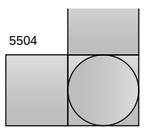

Female NPTF X 90 Female NPTF

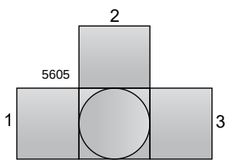

Female NPTF Tee

PLATED STEEL							
NPTF T1 NPTF	T2	90° Male NPTF X Female NPTF		Female NPTF X 90° Female NPTF		Female NPTF Tee	
		Part #	List	Part #	List	Part #	List
1/8”	1/8”	5502-02-02		5504-02-02		5605-02	
	1/4”	5502-02-04		---		---	
1/4”	1/8”	5502-04-02		5504-04-02		---	
	1/4”	5502-04-04		5504-04-04		5605-04	
	3/8”	5502-04-06		---		---	
3/8”	1/4”	5502-06-04		5504-06-04		---	
	3/8”	5502-06-06		5504-06-06		5605-06	
	1/2”	5502-06-08		---		---	
1/2”	1/4”	---		5504-08-04		---	
	3/8”	5502-08-06		5504-08-06		---	
	1/2”			---		---	
	1/2”	5502-08-08		5504-08-08		5605-08	
3/4”	1/2”	5502-12-08		5504-12-08		---	
1/2”	3/4”	5502-08-12		---		---	
3/4”	3/4”	5502-12-12		5504-12-12		5605-12	
1”	3/4”	5502-16-12		5504-16-12		---	
	1”	5502-16-16		5504-16-16		5605-16	
	1-1/4”	5502-16-20		---		---	
1-1/4”	1”	5502-20-16		5504-20-16		---	
	1-1/4”	5502-20-20		5504-20-20		5605-20	
1-1/2”	1-1/2”	5502-24-24		5504-24-24		5605-24	
2”	2”	5502-32-32		5504-32-32		5605-32	

PLUGS

PLATED STEEL						
NPTF	Male Hex Head		ORB O-Ring Hex Head		JIC JIC Hex Head	
	Part #	List	Part #	List	Part #	List
1/8”	5406-P-02		---		---	
3/16”	---		---		---	
1/4”	5406-P-04		---		---	
5/16”	---		6408-02		---	
3/8”	5406-P-06		6408-03		2408-03	
7/16”	---		6408-04		2408-04	
1/2”	5406-P-08		6408-05		2408-05	
9/16”	---		6408-06		2408-06	
5/8”	---		---		---	
3/4”	5406-P-12		6408-08		2408-08	
7/8”	---		6408-10		2408-10	
1”	5406-P-16		---		---	
1-1/16”	---		6408-12		2408-12	
1-3/16”	---		6408-14		2408-14	
1-1/4”	5406-P-20		---		---	
1-5/16”	---		6408-16		2408-16	
1-1/2”	5406-P-24		---		---	
1-5/8”	---		6408-20		2408-20	
1-7/8”	---		6408-24		2408-24	
2”	5406-P-32		---		---	
2-1/2”	---		6408-32		2408-32	


5406
Male Hex Head


6408
O-Ring Head Head

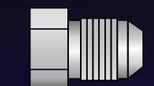
2408
JIC Hex Head

JIC CAPS

PLATED STEEL		
JIC T1	Female JIC	
	Part #	List
7/16”	304-C-04	
1/2”	304-C-05	
9/16”	304-C-06	
3/4”	304-C-08	
7/8”	304-C-10	
1-1/16”	304-C-12	
1-3/16”	304-C-14	
1-5/16”	304-C-16	
1-5/8”	304-C-20	
1-7/8”	304-C-24	
2-1/2”	304-C-32	


Female JIC

THREAD SEALANTS - ANTI-SEIZE

Details	Bottle	
	Part #	List
AST-SEAL™ HYD:		
An excellent sealant for straight metal threads up to 1" diameter created to withstand hydraulic system pressures. Resistance to high temp, water, and non-polar solvents.	*22542	
AST-SEAL™ PM:		
Same as 22542 but five times more (250mL)	*22543	
AST-SEAL™ PH:		
Designed to resist all hydraulic fluids and seal your Pneumatic / Hydraulic systems. This is a thicker non-running version of AST-SEAL™ HYD for overhead and inside machinery applications.	*22545	
AST-SEAL™ :		
Same as 22545 but five times more (250mL)	*22546	



* For Hydraulic Use

* 22542 * 22543

CORROSION RESISTANCE OF COUPLING MATERIALS

CAUTION: The following data has been compiled from generally available sources end should not be relied upon without consulting and following the specific recommendations of the manufacturer regarding particular coupling materials.

RATINGS: 1. Excellent 2. Good 3. Fair Conditional x. Not Satisfactory **NOTES:** No rationg indicates no data available

AGENT	Mall. From Steel	Brass	Bronze	Aluminum	Glass	Stainless 410, 416, 430	Stainless 302, 202, 304, 308	Stainless 316	Monel
Acetate, Solvents, Crude		3				2	1	1	2
Acetate, Solvents, Pure		1	1	1		1	1	1	1
Acetic Acid	X	X	X	2	1	X	2	2	2
Acetic Acid Vapor	X	X		3		X	2	2	3
Acetic Anhydride	X	X		2		X	2	2	2
Acetone	1	1	1	1	1	1	1	1	1
Acetylene	1	2		1		1	1	1	2
Alcohols	1	2		1		1	1	1	1
Aluminum Sulfate	X	3	3	3	1	X	3	2	2
Alums	X	3	2	3	1	X	3	2	2
Ammonia Gas	1	X	3	1	3	1	1	1	X
Ammonium Chloride	1	3		1*		3	3	1	1
Ammonium Hydroxide	2	X		2		1	1	1	3
Ammonium Nitrate	1	X		2		1	1	1	3
Ammonium Phosphate (Ammoniacal)		X				1	1	1	2
Ammonium Phosphate (Neutral)		3				1	1	1	2
Ammonium Phosphate (Acid)		3				3	2	1	2
Ammonium Sulfate	1	3				2	1	1	2
Asphalt	1	2				2	1	1	1
Beer	2	2	1	1		X	1	1	1
Beet SugarLiquors	1	2		1		2	1	1	1
Benzene, Benzol	1	1	1	1	1	1	1	1	1
Benzine (petroleum-naphtha)	1	1		1		1	1	1	1
Borax	2	2				1	1	1	1
Boric Acid	X	3		1		3	2	1	1
Butane, Butylene	1	1	1	1		1	1	1	1
Butadiene		1				1	1	1	1
Calcium Bisulfate		X				X	2	1	X
Calcium Hypochlorite	3	3	3	X	3	X	3	2	3
Cane Sugar Liquors	1	2		1		2	1	1	1
Carbon Dioxide (Dry)	1	1		1		1	1	1	1
Carbon Dioxide (Wet & Aqueous Sol)	2	3		2		2	1	1	2
Carbon Disulfide	2	3		2		2	1	1	3
Carbon Tetrachloride	3	1	2	3	1	1	1	1	1
Chlorine (Dry)	2	2	2	1	2	2	2	2	1
Chlorine (Wet)	X	X	3	X	2	X	X	3	3
Chromic Acid		X	X	X	1	3	2	2	3
Citric Acid	X	3		1		3	X	1	2
Coke Oven Gas	1	3		2		1	1	1	2
Copper Sulfate	X	X		X		1	1	1	3
Core Oils		1	1			1	1	1	1
Cottonseed Oil	1	1	1	1		1	1	1	1
Creosote	2	3		1		1	1	1	1
Ethers	2	1		1		1	1	1	1
Ethylene Glycol	2	2				1	1	1	1
Ferric Chloride	X	X	X	X	1	X	X	X	X
Ferric Sulfate	X	X		X		1	1	1	3
Formaldehyde	2	2		2		1	1	1	1

*3 to X at high temperatures. Chemical Chart is reprinted from 1996 RMA Hose Handbook

TECHNICAL DATA

CORROSION RESISTANCE OF COUPLING MATERIALS

CAUTION: The following data has been compiled from generally available sources end should not be relied upon without consulting and following the specific recommendations of the manufacturer regarding particular coupling materials.

RATINGS: 1. Excellent 2. Good 3. Fair Conditional x. Not Satisfactory **NOTES:** No rationg indicates no data available

AGENT	Mall. From Steel	Brass	Bronze	Aluminum	Glass	Stainless 410, 416, 430	Stainless 302, 202, 304, 308	Stainless 316	Monel
Formic Acid	X	2		X		X	2	1	2
Freon	3	1	1	1		1	1	1	1
Furfural	1	2		1		1	1	1	1
Gasoline (Sour)	3	3		3		3	1	1	X
Gasoline (Refined)	1	1	1	1		1	1	1	1
Gelatin	1	3		1		1	1	1	1
Glucose	1	1		1		1	1	1	1
Glue	1	3		1		1	1	1	1
Glycerine or Glycerol	1	2		1		1	1	1	1
Hydrochloric Acid	X	X	X	X	1	X	X	X	X
Hydrocyanic Acid	3	X		1		3	1	1	2
Hydrofluoric Acid	X	3	3	X	X	X	X	X	X
Hydrogen Fluoride		3				X	X	3	1
Hydrogen	1	1		1		1	1	1	1
Hyrogen Peroxide	X	X		1		1	2	1	2
Hydrogen Sulfide (Dry)	3	3		2		3	2	1	3
Hydrogen Sulfide (Wet)	3	3		2		3	2	1	3
Lacquers and Lacquer Solvents	3	2		1		1	1	1	1
Lactic Acid	X			3			3	2	1
Lime-Sulfur	2	X		2		1	1	2	
Linseed Oil	1	1		1			1	1	1
Magnesium Chloride	3	3		X		3	2	1	1
Magnesium Hydroxide	1	2		X		1	1	1	1
Magnesium Sulfate	2	2		3		1	1	1	1
Mercuric Chloride	3	X		X		X	X	3	X
Mercury	1	X		X		1	1	1	2
Milk	3	3		1		2	1	1	3
Molasses	2	X		2		2	1	1	1
Natural Gas	1	2		1		1	1	1	1
Nickel Chloride		X		X		X	3	2	2
Nickel Sulfate		3		X		3	2	1	1
Nitric Acid	X	X	X	3	1	2	2	2	X
Oleic Acid	2	3		1		2	2	1	1
Oxalic Acid	3	3		2		3	2	1	1
Oxygen	1	1	1	1		1	1	1	1
Palmitic Acid	1	3		1		2	2	1	1
Petroleum Oils (Sour)		3				3	1	1	X
Petroleum Oils (Refined)	1	1	1	1		1	1	1	1
Phosphoric Acid 25%	3	X		3	3	X	3	1	2
Phosphoric Acid 25-50%	X	X		X	3	X	X	2	2
Phosphoric Acid 50-85%	X	X		X	X	X	X	2	2
Picric Acid	3	X		3		2	1	1	X
Potassium Chloride	2	3		3		3	2	1	1
Potassium Hydroxide	3	X		X		1	1	1	1
Potassium Sulfate	2	2		1		1	1	1	1
Propane	1	1				1	1	1	1
Rosin (Dark)	1	2			1	1	1	1	1
Rosin (Light)		X		1		1	1	1	2

*3 to X at high temperatures. Chemical Chart is reprinted from 1996 RMA Hose Handbook

CORROSION RESISTANCE OF COUPLING MATERIALS

CAUTION: The following data has been compiled from generally available sources end should not be relied upon without consulting and following the specific recommendations of the manufacturer regarding particular coupling materials.

RATINGS: 1. Excellent 2. Good 3. Fair Conditional x. Not Satisfactory

NOTES: No rationg indicates no data available

AGENT	Mall. From Steel	Brass	Bronze	Aluminum	Glass	Stainless 410, 416, 430	Stainless 302, 202, 304, 308	Stainless 316	Monel
Shellac		2		2		1	1	1	1
Sludge Acid		X				X	X	3	2
Soda Ash (Sodium Carbonate)	1	2		X		1	1	1	1
Sodium Bicarbonate	3	1		X		1	1	1	1
Sodium Bisulfate	X	3		3		X	1	1	1
Sodium Chloride	2	3	2	X	1	3	2	1	1
Sodium Cyanide	2	X		X		1	1	1	2
Sodium Hydroxide	3	X	3	X	X	2	2	2	1
Sodium Hypochlorite	X	X		X		X	3	2	3
Sodium Metaphosphate	X	3		1		2	1	1	1
Sodium Nitrate	1	3		1		1	1	1	1
Sodium Perborate	3	3		1		1	1	1	1
Sodium Peroxide	3	3		1		1	1	1	1
Sodium Phosphate (Alkaline)		3				1	1	1	1
Sodium Phosphate (Neutral)		2				1	1	1	1
Sodium Phosphate (Acid)		2				X	2	1	1
Sodium Silicate	1	3		X		1	1	1	1
Sodium Sulfate	1	2		3		1	1	1	1
Sodium Sulfide	1	X				1	1	1	2
Sodium Thiosulfate (Hypo)	3	X		X		1	1	1	2
Stearic Acid	3	3		3		2	2	1	1
Sulfate Liquors		X				1	1	1	2
Sulfur	2	X		2		2	2	1	3
Sulfur Chloride	X	X				X	3	2	2
Sulfur Dioxide (Dry)	2	1		1		1	1	1	1
Sulfur Dioxide (Wet)		X				X	2	1	X
Sulfuric Acid 10%	X	X	3	3		X	X	2	2
Sulfuric Acid 10-75%	X	X	X	X		X	X	X	2
Sulfuric Acid 75-95%	3	X	X	X		3	3	2	3
Sulfuric Acid 95%	2	X	X			2	2	2	X
Surlfurous Acid	X	X		X		X	3	2	X
Tannic Acid	3	3	1	X			1	1	1
Tar	1	2		1		2	1	1	1
Toluene, Toluol	1	1		1		1	1	1	1
Trichlorethylene	3	1		3		1	1	1	1
Turpentine		3		1		3	1	1	1
Varnish	2	2				1	1	1	1
Vegetable Oils	1	2		1		1	1	1	1
Vinegar	3	3		3		3	2	1	2
Water (Acid Mine Water)	3	X		3		2	1	1	3
Water (Fresh)	3	1		1		1	1	1	1
Water (Salt)	3	3	2	X		3	2	2	1
Whiskey	X	2				3	1	1	2
Wines	X	2				3	1	1	2
Xylene, Xylol	2	1		1		1	1	1	1
Zinc Chloride	X	X		X		3	2	1	1
Zinc Sulfate	3	3		3		3	2	1	1

*3 to X at high temperatures.

Chemical Chart is reprinted from 1996 RMA Hose Handbook

OIL & GASOLINE RESISTANCE

Rubber hose is used to convey petroleum products both in the crude and refined stages. The aromatic content of refined gasoline is often adjusted to control the octane rating. The presence of aromatic hydrocarbons in this fuel generally has a greater effect on rubber components than do aliphatic hydrocarbons. Aromatic materials in contact with rubber tend to soften it and reduce its physical properties. For long lasting service, the buyer of gasoline hose should inform the hose manufacturer of the aromatic content of the fuel to be handled so that the proper tube compound can be recommended for the specific application.

The effects of oil on rubber depend on a number of factors that include the type of rubber compound, the composition of the oil, the temperature and time of exposure. Rubber compounds can be classified as to their degree of oil resistance based on their physical properties after exposure to a standard test fluid. In this RMA classification, the rubber samples are immersed in IRM 903 oil at 100°C for 70 hours. (See ASTM Method D-471 for a detailed description of the oil and the testing procedure.) As a guide to the user of hose in contact with oil, the oil resistance classes and a corresponding description are listed.

PHYSICAL PROPERTIES AFTER EXPOSURE TO OIL:

		VOLUME CHANGE MAXIMUM	TENSILE STRENGTH RETAINED
CLASS A	(HIGH OIL RESISTANCE)……....	**+25%**	**80%**
CLASS B	(MEDIUM/HIGH OIL RESISTANCE)……....	**+65%**	**50%**
CLASS C	(MEDIUM OIL RESISTANCE)……....	**+100%**	**40%**

CHEMICAL RECOMMENDATIONS

The materials being handled by flexible rubber hose are constantly increasing in number and diversity. T o assist in the selection of the proper elastomer for the service conditions encountered, the following table has been prepared. The reader is cautioned that it is only a guide and should be used as such, as the degree of resistance of an elastomer with a particular fluid depends upon such variables as temperature, concentration, pressure, velocity of flow, duration of exposure, aeration, stability of the fluid, etc. Also variations in elastomer types and special compounding of stocks to meet specific service conditions have considerable influence on the results obtained. When in doubt, it is always advisable to test the tube compound under actual service conditions. If this is not practical, tests should be devised that simulate service condtions or the hose manufacturer contacted for Recommendations.

The following table lists the more commonly used materials, chemicals, solvents, oils, etc. The recommendation are based on room temperature and pressure conditions normally recommended for the particular type of hose being used. Where conditions beyond this can be met readily, they have been so indicated; where conditions are not normal and cannot be readily met, the hose manufacturer should always be consulted. The table does not imply conformance to the Food & Drug Administration requirements of Federal or State Laws when handling food products.

TABLE OF CHEMICAL, OIL & SOLVENT RESISTANCE OF HOSE:

WARNING: The following data has been compiled from generally available sources and should not be relied upon without consulting and following the hose manufacturer's specific chemical recommendations. Neglecting to do so might result in failure of the hose to fulfill its intended purpose, and may result in possible damage to property and serious bodily injury.

RESISTANCE RATING

A - Good Resistance, usually suitable for service.

F - Fair Resistance, the chemical has some deteriorative effects, but the elastomer is still adequate for moderate service.

C- Depends on Condition, moderate service may be possible if chemical exposure is limited or infrequent.

X- Not recommended, unsuitable for service.

I - Insufficient Information, not enough data available at the time of publication to determine rating.

RELASTOMERS/PLASTICS

NR- Natural Rubber
IR - Isoprene, synthetic
SBR - Styrene-butadiene
CR- Chloroprene
NBR - Nitrile-butadiene
IIR- Isobutene-isoprene
CSM - Chloro-sulfonyl-polyethylene
EPDM - Ethylene-propylene-diene-terpolymer
MQ - Dimethyl-polysiloxane
FKM- Fluoracarbon rubber
CM - Chloro-polyethylene
ECO/CO- Ephichlorohydrin
EXLPE- Chloro-sulfonyl-polyethylene

NOTES

NOTES